# MODULOC Control Systems

## ACD1K.002 LDM SECONDARY ENVIRONMENTAL ENCLOSURE

- ***Secondary Environmental Enclosure with air cooling and air purging.***
- ***For use with the ELDP and MDHD Family of Laser Distance Meters.***
- ***Provides air cooling where ambient temperature can reach greater than 50°C.***
- ***Provides Dual Air Purging which keeps dust and contaminants off of tempered glass front window.***
- ***Robust Design Provides Mechanical Protection for the LDM - IP55 rating.***
- ***Adjustable Mounting Platform, provides Vertical and Horizontal Axis Adjustments.***
- ***Vibration Mounts are included.***

### *Features*

- Heavy Duty Robust Design.
- Provides additional mechanical protection of Laser Distance Meter.
- Tempered glass front window.
- Provides air cooling of laser and air purging of laser lens.
- Adjustable Mounting Platform, providing Vertical and Horizontal Axis Adjustments.
- Additional Secondary Environmental Enclosures are available including Peltier Cooling and water cooled.

### *ELDP & MDHD Product Family*

- ELDP10 for measurements to a reflector panel at distances over 80M or to natural surfaces up to 20M.
- The MDHD20HT is designed for measurements off of a red hot surface up to 1 4 0 0 °C at distances up to 20M.
- MDHD100 for measurements to a reflector panel at distances up to 800M or to natural surfaces up to 155M.
- MDHD600 for measurements to a reflector panel at distances up to 600M & Glass Prism reflectors up to 1200M.

### *Typical Applications*

- Crane applications in areas where air cooling and air purging, and additional mechanical protection, and Vertical and Horizontal Axis Adjustments are required.
- Any Laser Distance Meter application in areas where air cooling and air purging, and additional mechanical protection, and Vertical and Horizontal Axis Adjustments are required.

### *Description*

The ACD1K.002 Laser Distance Meter Secondary Enclosure provides additional mechanical protection for the ELDP and MDHD Family of laser distance meters as well as other laser distance meters. The ACD1K.002 includes air cooling in applications where ambient temperature can reach greater than 50°C rating of the laser distance meter. The ACD1K.002 provides Dual Air Purging to keep dust and contaminants off of the tempered glass front window. The ACD1K.002 includes an adjustable Mounting Platform which provides a 20mm Vertical Axis Adjustment and a 20° Horizontal Axis Adjustment during alignment. Vibration Mounts are included for crane and other applications where vibration is present.

**MODULOC Technology - The Total Laser Solution**

*MODULOC Control Systems Ltd.*
Wheathamstead, Hertfordshire, AL4 8SB United Kingdom
Phone: +44 (0)845 8736501 FAX: +44 (0)1582 831980
E-Mail: sales@moduloc-intl.com Website: www.moduloc-intl.com

*MODULOC Control Systems, Inc.*
2808 Broadway Blvd. - Suite 201B, Monroeville, PA 15146 USA
Phone: 412-824-1260 FAX: 412-824-8890
E-Mail: sales@moduloc-usa.com Website: www.moduloc-usa.com

## *ACD1K.002 Dimensional Info*

**Weight:** 6 kg (without the LDM)
**Rating:** IP55

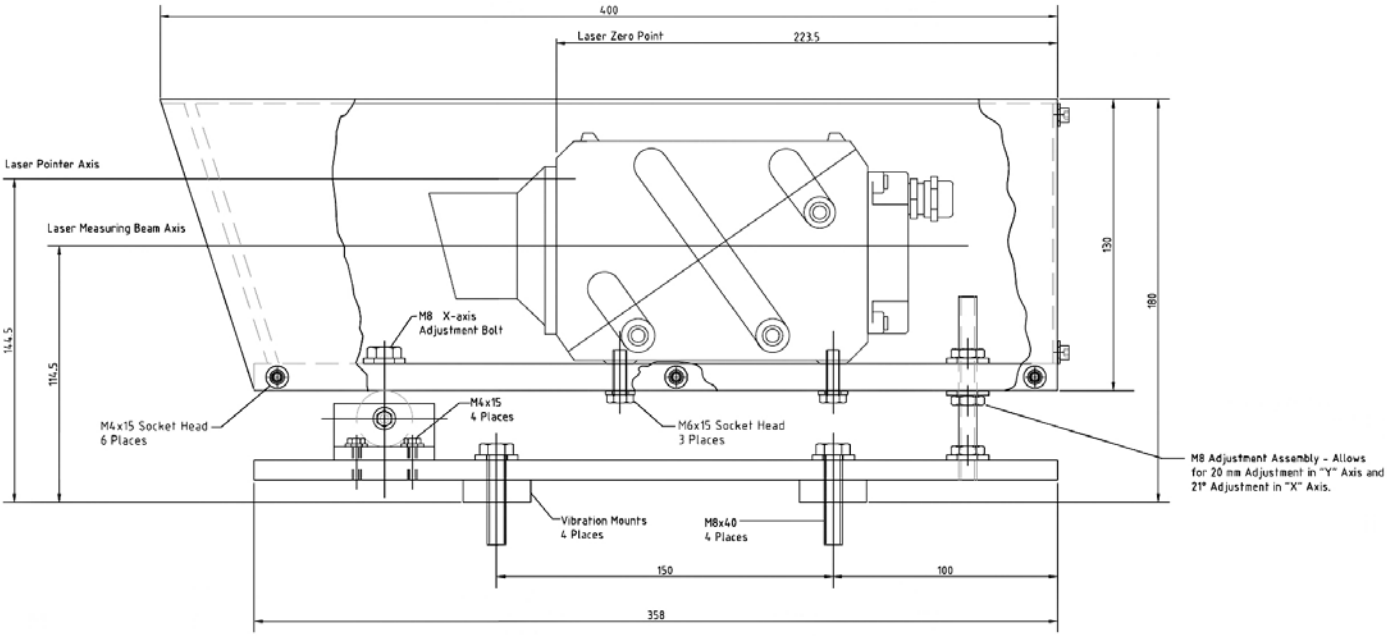


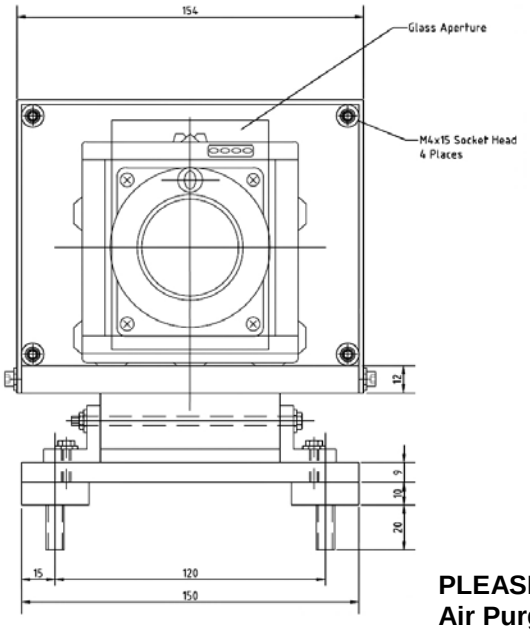


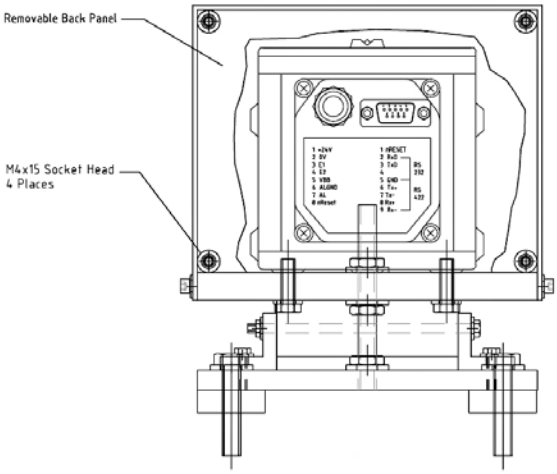


**PLEASE NOTE:**
**Air Purging and air Cooling are not shown in this drawing.**

***MODULOC Technology - The Total Laser Solution***

**MODULOC**
Control Systems

We reserve the right to alter specifications without prior notice. Specifications without tolerances are typical values.

Your Local Sales Representative:

nqa. ISO 9001 Registered
UKAS QUALITY MANAGEMENT 015

Bulletin MC-ACD1K.002-08-01
January 2008