MODULOC® Control Systems

CPMT2 LDM SECONDARY ENVIRONMENTAL ENCLOSURE

- ***Secondary Environmental Enclosure***
- ***For use with the ELDP and MDHD Family of Laser Distance Meters.***
- ***Robust Design Provides Mechanical Protection the LDM.***
- ***Adjustable Mounting Platform, provides Vertical and Horizontal Axis Adjustments.***
- ***Vibration Mounts are included.***

Features	***ELDP & MDHD Product Family***
• Heavy Duty Durable Design • Provides additional mechanical protection of Laser Distance Meter. • Adjustable Mounting Platform, providing Vertical and Horizontal Axis Adjustments. • Additional Secondary Environmental Enclosures are available including air purged, and water cooled.	• ELDP10 for measurements to a reflector panel at distances over 80M or to natural surfaces up to 20M. • The MDHD20HT is designed for measurements off of a red hot surface up to 1 4 0 0 °C at distances up to 20M. • MDHD100 for measurements to a reflector panel at distances up to 800M or to natural surfaces up to 155M. • MDHD600 for measurements to a reflector panel at distances up to 600M & Glass Prism reflectors up to 1200M.

Typical Applications

- Crane applications in areas where additional mechanical protection, and Vertical and Horizontal Axis Adjustments are required.
- Any Laser Distance Meter application in areas where additional mechanical protection, and Vertical and Horizontal Axis Adjustments are required.

Description

The CPMT2 Laser Distance Meter Secondary Enclosure provides additional mechanical protection. The CPMT2 includes an adjustable Mounting Platform which provides a 20mm Vertical Axis Adjustment and a 20° Horizontal Axis Adjustment during alignment.

MODULOC® Technology - The Total Laser Solution

MODULOC® Control Systems Ltd.
Wheathamstead, Hertfordshire, AL4 8SB United Kingdom
Phone: +44 (0)845 873 6501 FAX: +44 (0)158 283 1980
E-Mail: sales@moduloc-intl.com Website: www.moduloc-intl.com

MODULOC® Control Systems, Inc.
2808 Broadway Blvd. - Suite 201B, Monroeville, PA 15146 USA
Phone: 412-824-1260 FAX: 412-824-8890
E-Mail: sales@moduloc-usa.com Website: www.moduloc-usa.com

CPMT2 Dimensional Info

Weight: 5 kg (without the LDM)
Rating: IP55

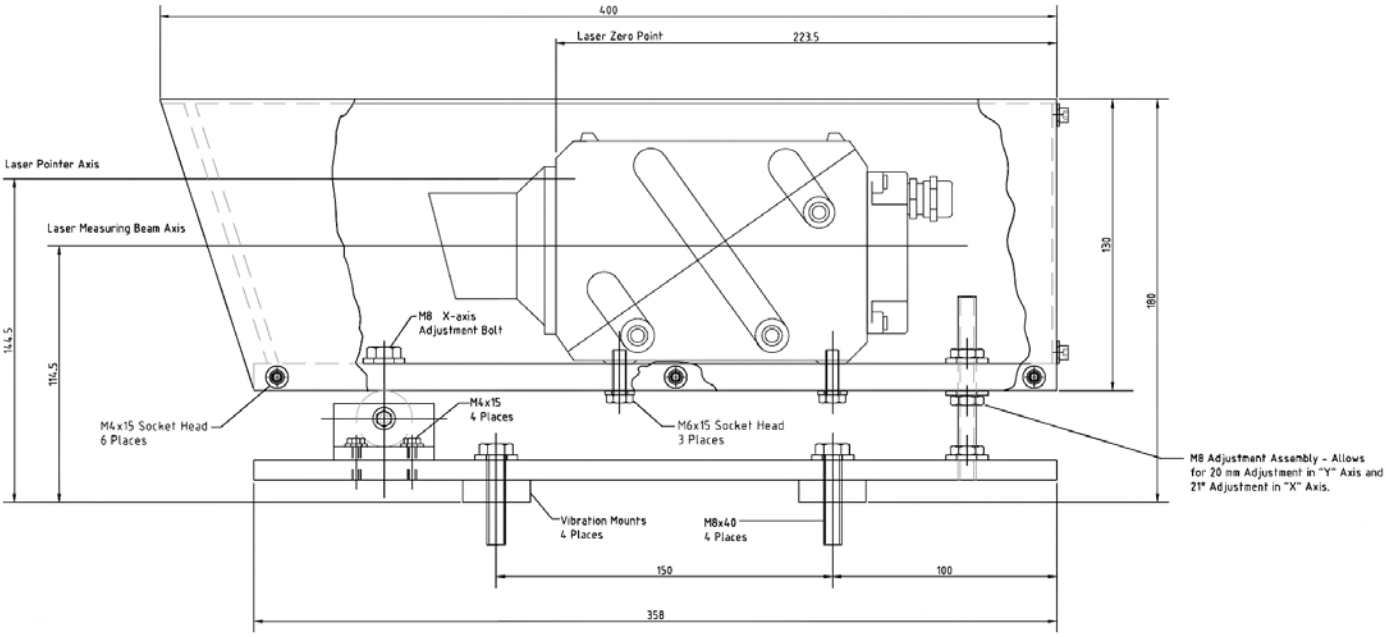

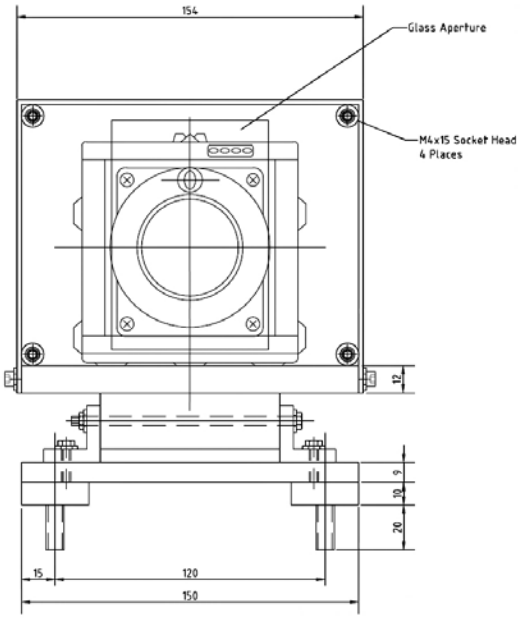

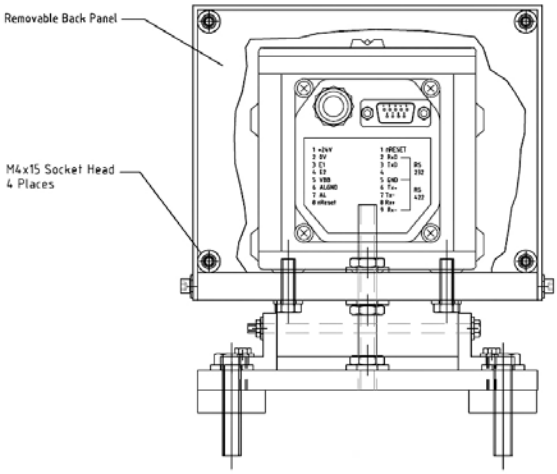

MODULOC® Technology - The Total Laser Solution

MODULOC®
Control Systems

We reserve the right to alter specifications without prior notice. Specifications without tolerances are typical values.

Your Local Sales Representative:

nqa. ISO 9001 Registered
UKAS QUALITY MANAGEMENT 015

Bulletin MC-CPMT2-08-01
January 2008