MODULOC Control Systems

CPO2 LASER DISTANCE METER MOUNTING PLATFORM

- ***Dual Axis Mounting Platform***
- ***For use with the ELDP and MDHD Family of Laser Distance Meters.***
- ***Adjustable Mounting Platform, provides Vertical and Horizontal Axis Adjustments.***
- ***Vibration Mounts are included.***

Features	***ELDP & MDHD Product Family***
• Heavy Duty Durable Design • Adjustable Mounting Platform, providing Vertical and Horizontal Axis Adjustments. • Additional Secondary Environmental Enclosures are available including air purged, and water cooled.	• ELDP10 for measurements to a reflector panel at distances over 80M or to natural surfaces up to 20M. • The MDHD20HT is designed for measurements off of a red hot surface up to 1 4 0 0 °C at distances up to 20M. • MDHD100 for measurements to a reflector panel at distances up to 800M or to natural surfaces up to 155M. • MDHD600 for measurements to a reflector panel at distances up to 600M & Glass Prism reflectors up to 1200M.

Typical Applications

- Crane applications in areas where Vertical and Horizontal Axis Adjustments are required.
- Any Laser Distance Meter application in areas where Vertical and Horizontal Axis Adjustments are required.

Description

The CPO2 Laser Distance Meter Mounting Platform has an adjustable Mounting Platform which provides a 20mm Vertical Axis Adjustment and a 20° Horizontal Axis Adjustment during alignment.

MODULOC Technology - The Total Laser Solution

MODULOC Control Systems Ltd.
Wheathamstead, Hertfordshire, AL4 8SB United Kingdom
Phone: +44 (0)845 873 6501 FAX: +44 (0)158 283 1980
E-Mail: sales@moduloc-intl.com Website: www.moduloc-intl.com

MODULOC Control Systems, Inc.
2808 Broadway Blvd. - Suite 201B, Monroeville, PA 15146 USA
Phone: 412-824-1260 FAX: 412-824-8890
E-Mail: sales@moduloc-usa.com Website: www.moduloc-usa.com

CPO2 Dimensional Info

Weight: 3 kg (without the LDM)
Rating: IP55

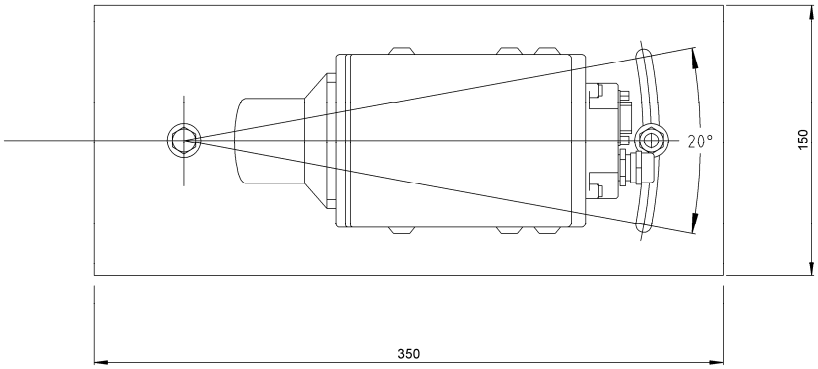

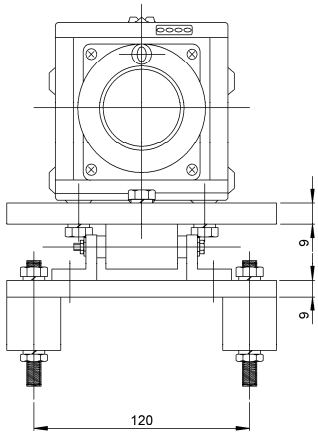

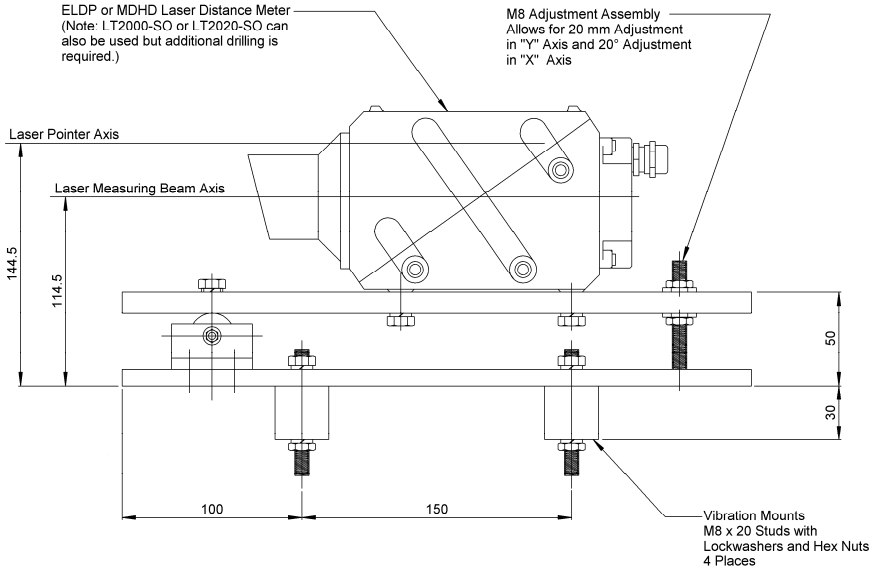

MODULOC Technology - The Total Laser Solution

MODULOC
Control Systems

Your Local Sales Representative:

We reserve the right to alter specifications without prior notice. Specifications without tolerances are typical values.

Bulletin MC-CP02-08-01
January 2008