# MODULOC Control Systems

## LD-6001 LASER LENGTH & WIDTH GAUGE

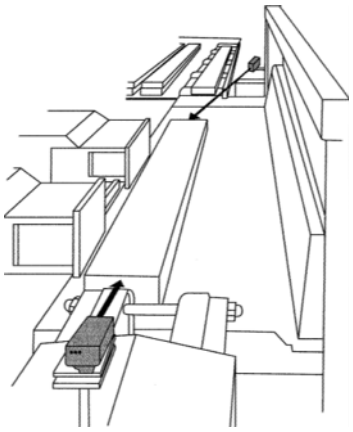

- ***Advanced Laser Technology providing precise distance measurement.***
- ***Measure off of hot or cold material.***
- ***Laser's can measure at an oblique angle.***
- ***Laser's can mount up to 100 feet from material.***
- ***Self-diagnostic code messages.***
- ***Remote Modem calibration.***

| Features | Product Family | Measurement Ranges |
|---|---|---|
| • High resolution of between 3 to 10 mm<br>• Standard Interface: RS232/RS422<br>• Intelligent LDM incorporating continuous self test<br>• Optional Network Interface: PROFIBUS DP<br>• Secondary Environmental Enclosures are available for additional protection of laser for indoor, outdoor and elevated temperature applications. | • **ELDP10** | Off natural surfaces up to 3.7M<br>At temperatures up to 700°C |
| | • **MDHD100** | Off natural surfaces up to 40M<br>At temperatures up to 700°C |
| | • **MDHD20HT** | Off a red hot surface up to 20M<br>At temperatures up to 1400°C |

### Description

The LD-6001 System utilizes advanced technology ELDP & MDHD Laser Distance Meters operating on a unique pulsed time-of-flight (TOF) measurement technique in conjunction with a powerful CPU engineered to provide convenient operation & communication between the lasers and the mill computer.

Utilizing compact line of sight ELDP & MDHD Laser Distance Meters that operate off of both cold or hot product, even inside the furnace, this Gauging System is well suited for determining the size and position of steel product such as slabs, blooms or billet in the furnace area & other difficult areas in the rolling mill.

The CPU automatically energizes the Laser Distance Meters, interrogates their functional state, then displays the individual measured distances, calculates the width, length or centerline deviations. These values are then combined into a single data string for direct connection to a Mill Computer via RS232C serial port or an optional Network Interface.

Communication & adjustment of the laser distance meters functions is via a straightforward ASCII commands. A detachable keyboard, the Mill computer or the integrated modem provide 3 alternative means of calibration & fault finding on or off site. Calibration is straightforward and achieved by positioning an established source in the area of measurement and configuring the system via the mill computer or modem.

ELDP & MDHD Laser Distance Meters

Secondary Environmental Enclosures

ESD1K.003 LDM Secondary Environmental Enclosures

**MODULOC Technology - The Total Laser Solution**

*MODULOC Control Systems Ltd.*
Wheathamstead, Hertfordshire, AL4 8SB United Kingdom
Phone: +44 (0)845 873 6501 FAX: +44 (0)158 283 1980
E-Mail: sales@moduloc-intl.com Website: www.moduloc-intl.com

*MODULOC Control Systems, Inc.*
500 Garden City Drive. - Suite 2B, Monroeville, PA 15146 USA
Phone: 412-824-1260 FAX: 412-824-8890
E-Mail: sales@moduloc-usa.com Website: www.moduloc-usa.com

## *DIMENSIONS*

### ELDP Laser

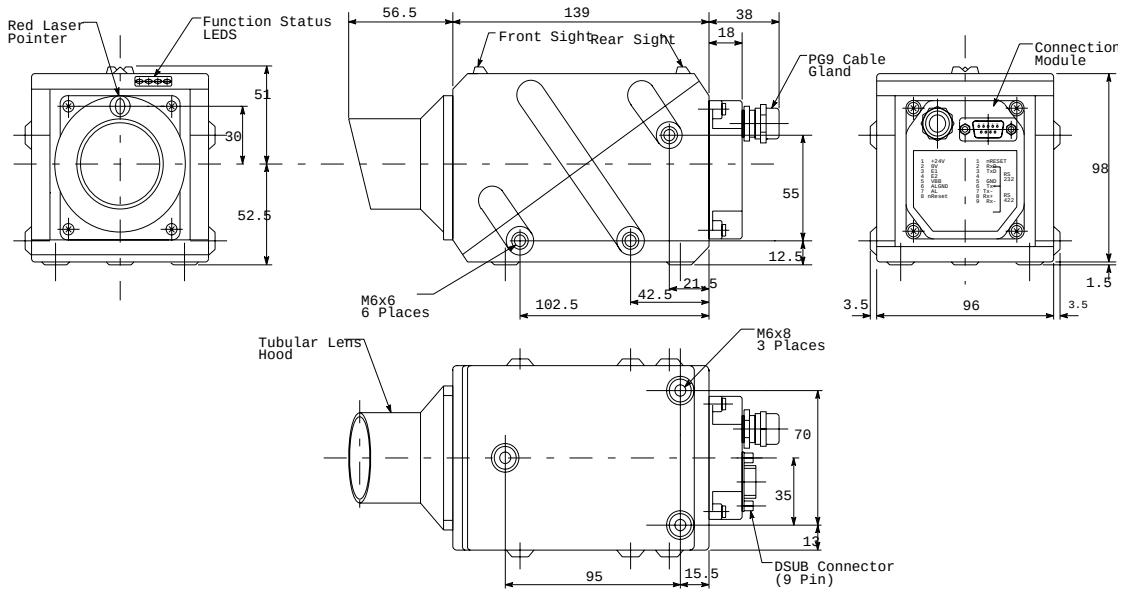


## *Technical Info*

| | *Reference Data* | *ELDP10* | *MDHD100* | *MDHD20HT* |
|---|---|---|---|---|
| Working Range off Product Surface | Material Color: Black | 3.7M | 40M | 20M |
| Relative Accuracy (Min. update rate) | Repeatability | +/-3mm | +/-6 mm | +/-10mm |
| Maximum Product Temperature | | 700°C | 700°C | 1200°C |
| Measuring Laser | EN 60825-1 | Class 1 | Class 1M | Class 1M |

| | | | |
|---|---|---|---|
| Diagnostics | Self Diagnostic Error Message | Power supply | 80 - 260 VAC Switch mode power supply |
| Update Rate | 250 msec - 1000 msec | Temperature Range | -10°C (14°F) - +55°C (131°F) |
| Modem | Enables calibration of system and interrogation off site. (Model LD-6001-PC) | Enclosure Dimensions (mm) | Aluminum Housing, IP65, wall mounted, 330H x 230W x 110 D |
| Baud Rate | 2400—9600 baud | | |
| Standard Interface | RS232 (Model LD-6001-PC) | Optional Interface | PROFIBUS DP (Model LD-6001-PB) |

**MODULOC Technology - The Total Laser Solution**

MODULOC
Control Systems

We reserve the right to alter specifications without prior notice. Specifications without tolerances are typical values.

Your Local Sales Representative:

nqa. ISO 9001 Registered
UKAS QUALITY MANAGEMENT 015

Bulletin MC-LD-6001-09-01
January 2009