# MODULOC® Control Systems

## LT2000-SC LASER DISTANCE METER

- ***Visible Class II Laser providing precise distance measurement.***
- ***Operates off Natural Surfaces up to 30 Meters (98 feet), off a white target at 100 Meters (328 Feet) and off a special reflector target at 150 Meters (492 Feet).***
- ***Measuring rate as low as 100msec off of a white surface.***
- ***Provides +/- 2mm to +/- 5mm accuracy.***
- ***Low in cost yet long range.***
- ***RS232 & RS422 Serial Interface***
- ***Programmable 4-20 mA Analog Output***
- ***Programmable Digital Output & Offset***
- ***External Trigger Input***

### Typical Applications

| | |
|---|---|
| **Product Material** | Length, width, level and position of product. |
| **Material Handling** | Automated Storage/Retrieval Systems and positioning of mobile equipment. |
| **Metals Industry** | Measure/Position slab, billet, bloom or bar. |
| **Crane Control** | Positioning of cranes & crane trolleys. |
| **Collision Avoidance** | Distance alarm between vehicles using reflective target. |

### General Description

The LT2000-SC Laser Distance Meter operates over a substantial range off static or passing product in difficult areas in harsh environments. The LT2000-SC measures distances over a working range up to 30 meters off of natural surfaces , up to 100 meters off of white surfaces and up to 150 meters off of a special reflector. For operation with automated positioning control of material handling transport systems a white reflective target is used or the special reflector is used

Especially suited for precise detection and measurement of cold/hot product at temperatures up to 600°C. For higher product temperature our Model LT2000-HT is available for measurement of cold/hot product at product temperatures up to 1200°C.

Straightforward alignment is easily accomplished via the visible red laser measuring beam.

Accuracy is +/- 2mm to +/- 5mm according to ambient temperature and surface reflectivity. Repeatability is +/- 0.5mm and the user scalable resolution is 0.1mm.

The zero offset and the span of the 4 - 20 mA analog output are both user programmable. The distance offset is also user programmable, this allows the user to define a zero point independent of the analog output zero offset.

The LT2000-SC is provided with a user programmable digital switching output which is triggered by exceeding in the positive or negative direction a user programmable distance threshold. The hysteresis of the digital switching output is also programmable.

The LT2000-SC is a robust Laser Distance Meter and is provided in an IP65 cast aluminum housing. Standard operating temperature is 50°C.

The LT2000-SC laser distance meter provides a highly accurate measurement reading. It is ideal for length and width determination, and positioning of vehicles and overhead cranes.

The LT2000-SC is supplied a standard with either a RS232 or RS422/RS485 serial interface with a 2400 to 38,400 Baud Rate & a programmable 4 - 20 mA 16 BIT analog output. An optional ProfiBus DP Gateway Interface Box is available. ProfiBus DP, DeviceNet and Ethernet Interface Options will soon be available.

**MODULOC® Technology - The Total Laser Solution**

*MODULOC® Control Systems Ltd.*
Wheathamstead, Hertfordshire, AL4 8SB United Kingdom
Phone: +44 (0)845 8736501 FAX: +44 (0)1582 831980
E-Mail: sales@moduloc-intl.com Website: www.moduloc-intl.com

*MODULOC® Control Systems, Inc.*
2808 Broadway Blvd. - Suite 201B, Monroeville, PA 15146 USA
Phone: 412-824-1260 FAX: 412-824-8890
E-Mail: sales@moduloc-usa.com Website: www.moduloc-usa.com

## Housing Specifications

**Housing:** Aluminum, Oven baked blue paint
**Housing Rating:** IEC IP65, DIN 89011
**Weight w/o Cable:** 2.4 Kg (5.3Lbs)
**Cable Length:** 2 M Standard (Optional 5, 10 & 15M Available)

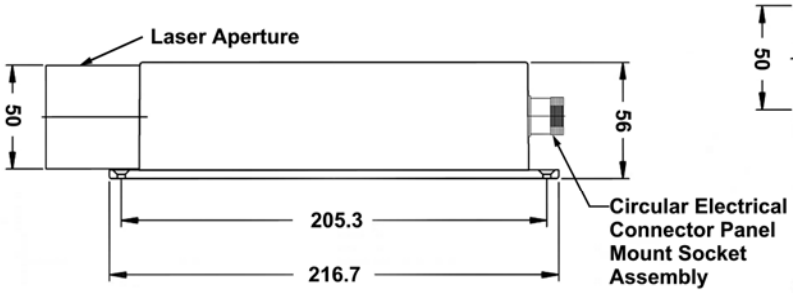


## LT2000-SC Dimensions

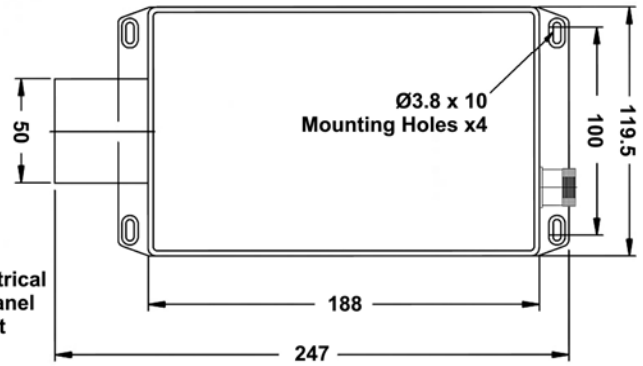


## General Specifications

| | | | |
|---|---|---|---|
| Operating range[1] (Type of surface) | Natural Surface: 0.2M (7.8IN) to 30M (98FT)<br>White Surface: 0.2M (7.8IN) to >100M (328FT)<br>Special Reflector: 2M ( 6.6FT) to > 150M (492FT) | Supply Voltage | 10 - 30 VDC |
| Accuracy (according to temperature range) | ± 3 mm (0.118in) for 15°C (59°F) to 30°C (86°F) | Operating Temperature | -10°C (14°F) to +50°C (122°F) |
| | ± 5 mm (0.197in) over full operating temperature range | Power Indication: | Red LED |
| Resolution | 0.1 mm user (programmable & scalable) | Storage Temperature | -20°C (-4°F) to +70°C (158°F) |
| Repeatability | ±0.5 mm (0.0197in) | Product Temperature Limit | Standard 600°C (Hi-Temp model available) |
| Scale (programmable) | Output can be M, cm, mm, yard, feet, inch | Serial Interface | RS232 or RS422/RS485 (2400 - 38,400 baud) |
| Measuring Time[2] (According to type of surface reflectivity) | Any Surface: 160 msec. to 6 sec. (typically 200 msec)[3] | Communication Protocol | Half Duplex via ASCII codes. |
| | White Surface: 100 msec (in DW Measuring Mode) | Programming | via Hyper-terminal & Supplied Software |
| Laser Wavelength | 659nm, Visible Red | Optional Interface* | ProfiBus gateway connection box |
| Laser Classification | Safety Class 2 (DIN EN 60825-1), Class II | Auto Distance Tracking | Can be programmed to start at power on |
| Laser Power | 1 mW | Digital Output | High value output with adjustable threshold, logic & hysteresis. 0.5 A limit |
| Laser Divergence | 0.6 mrad | | |
| Laser Spot Diameter | 6mm(0.236in) at 10M (32.8ft), 60mm (2.36in) at 100M (328ft) | Analog Output | Programmable 4-20mA, 16 BIT (0.15%) with 500 ohm Load Resistance.<br>Programmable Zero & Span.<br>Temperature drift of < 50ppm/°C. |
| MTTF | 32,000 hrs | | |
| Trigger Input | Adjustable with delay & hi/lo adjustment (DF Measuring Mode) | | |

1). Ranges shown are for DT, DW & DM measuring mode. DS measuring mode has a range of 0.5M (197.7IN) to 7M (23FT)
2). Measuring Time can also be preset in intervals of 240 msec to 6 seconds in DT measuring mode and preset in intervals of 150M to 3.75 seconds in DS measuring mode.
3). In DT & DS measuring mode

***Coming Soon:** New Interface Options - ProfiBus DP Interface, DeviceNet Interface and Ethernet Interface.*

## Optional BR22 Laser Interface

The BR22 Laser Interface provides a localized LCD display of distance measurement and programming of the laser operational parameters via keypad operation and a user-friendly menu. The BR22 operates from 90 - 240 VAC supply and provides the required DC power to the laser.

The BR22 communicates to the laser via an RS422 Serial Interface to accommodate long cable runs. When powered on the BR22 automatically starts and programs the laser to configured operational parameters. The BR22 provides a 4-20 mA analog output of the laser distance measurement as well as RS232 & RS422 serial interfaces. The BR22 has a relay output with adjustable threshold for product presence. Parameters for the BR22's analog output, host serial interface and relay output as well as for the laser are configured using the keypad and are displayed via a menu on the BR22 LCD display.

The BR22 is housed in an IP65 rated painted aluminum enclosure and can be placed directly on the mill floor. The operating temperature range is -10° C to +50°C.

The BR22 is available in several configurations, for operation of 1 or 2 lasers, for product length, thickness or width measurement, and for positioning control. The BR22 is also available with a supply voltage of 24VDC ±20%.

**MODULOC® Technology - The Total Laser Solution**

MODULOC®
Control Systems

Your Local Sales Representative:

We reserve the right to alter specifications without prior notice. Specifications without tolerances are typical values.

Bulletin MC-LT2000-SC-08-01
January 2008