MODULOC® Control Systems

LT200M RETRO-REFLECTIVE LASER BARRIER

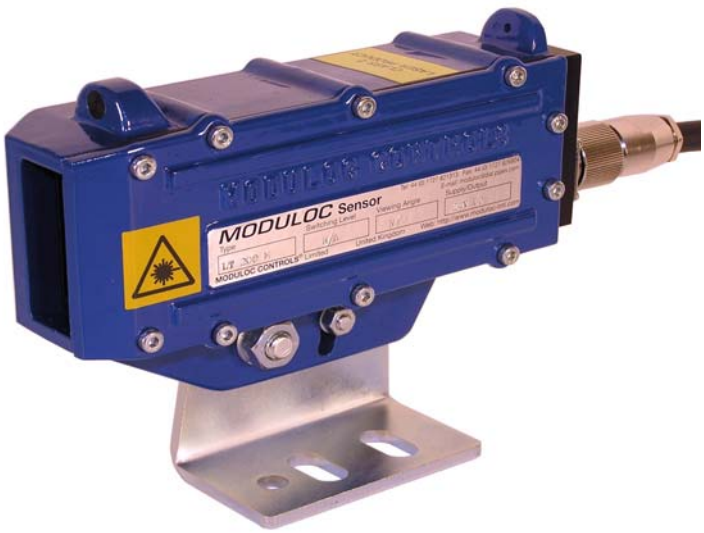

The Model LT200M Retro-Reflective Laser Barrier is available with either air coolant chamber venting as air purge or alternatively with a water coolant chamber and separate air purge.

- ***Visible Retro-Reflective Laser Thru-Beam Barrier***
- ***>20 Meter Range***
- ***Detects Hot or Cold Product***
- ***Operates off a prism reflector detecting as small as 6mm C.S.A. product***
- ***Edge Resolution of 3 mm per Meter***
- ***IR Filtering enables use in furnace entry door***
- ***Class II Laser Visible Laser Light***
- ***Continuous Self-Check with LED Indication of contaminated lens.***
- ***Robust cast aluminum housing rated IP66 with unique combined air purge & cooling***

Typical Applications

Furnace Door Monitoring	For prevention of product collision with furnace door.
Photo-Switch Replacement	Highly reliable retro-reflective through beam sensor.
Metals Industry	Detection of Hot and Cold Product

General Description

The LT200M Retro-Reflect Laser Barrier operates over a range of greater than 20 meters (65.6FT) enabling precise detection of hot or cold product in difficult areas.

The LT200M Retro-Reflect Laser Barrier is a robust sensor especially suited for precise detection and measurement of narrow profile product. Utilizing modulated laser beam with IR filtering enables precise detection of both cold and hot product.

Straightforward alignment is easily accomplished via the visible red Class II laser beam. Continuous self-check facility with LED indication of reflector contamination or poor signal return.

The LT200M is supplied with an 8A/250VAC SPNO/SPNC Form C output relay, and NPN & PNP 500mA transistor outputs.

The LT200M aluminum housing is supplied with built-in air coolant chamber venting as air purge. Standard operating temperature without air cooling is 40°C and with air cooling is 60°C. Optional water cooling is available for an operating temperature up to 70°C or 80°C.

Several reflectors designs are available with temperature ratings from 90°C up to 500°C. Optional air purged and air cooled reflectors are also available.

The LT200M provides highly accurate detection over the whole range as a result of a linear laser beam.

MODULOC® Technology - The Total Laser Solution

MODULOC® Control Systems Ltd.
Wheathamstead, Hertfordshire, AL4 8SB United Kingdom
Phone: +44 (0)845 873 6501 FAX: +44 (0)158 283 1980
E-Mail: sales@moduloc-intl.com Website: www.moduloc-intl.com

MODULOC® Control Systems, Inc.
2808 Broadway Blvd. - Suite 201B, Monroeville, PA 15146 USA
Phone: 412-824-1260 FAX: 412-824-8890
E-Mail: sales@moduloc-usa.com Website: www.moduloc-usa.com

Housing Specifications

Housing: Aluminum AL6, Oven baked blue paint
Housing Rating: IEC IP66, DIN 89011
Weight w/o Cable: 1.9 Kg
Connector: IP65 Plug/Socket
Cable Length: 2 M
Cooling: Standard: -A Air Cooled & Air Purged
Optional: -D Water Cooled & Air Purged

Air & Optional Water Specifications

Air Pressure:	1 cu ft./min at 5 PSI for normal conditions 5 cu ft./min at 15 PSI for severe conditions
Water Pressure:	5 to 10 PSI
Water Volume:	Regulate between 0.2 - 0.3 liters/min.
Water Temp.:	For Ambient Temperature up to 70°C (167°F) use ambient water below 20°C (68°F) For Ambient Temperature up to 80°C (176°F) use water chilled to 5°C

LT200M Dimensions

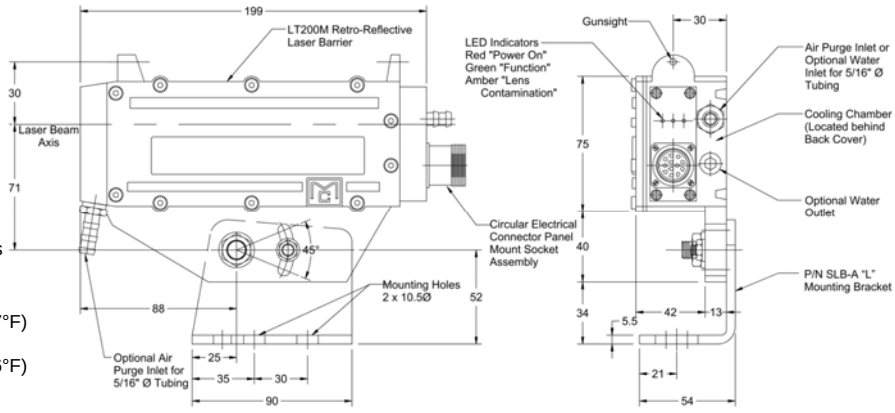

All Dimensions are in mm.

General Specifications

Operating range	Greater than 20 meters using special reflector	Supply Voltage	24 VDC ±20%
Edge Accuracy	3 mm per meter divergence	Power Consumption	1 Watt
Edge Resolution	± 1mm + divergence	Operating Temperature	-10°C (14°F) to +40°C (104°F) no cooling
Response time	0.05 msec on/off (10 msec lock between edges)		-10°C (14°F) to +60°C (140°F) w/air cooling
			+2°C (36°F) to 70°C (158°F) with water cooling
Laser Wavelength	Visible Red 650nm	Storage Temperature	-20°C (-4°F) to +70°C (158°F)
Laser Classification	Class II, Safety Class 2 (DIN EN 60825-1)	Output (#1)	Relay Output, Form C Contact (SPNO/SPNC) 250 VAC, 8A 20 mSec response time
Laser Power	1 mW		
Laser Divergence	0.5 mrad	Output (#2)	Switch selectable NPN & PNP Transistor Outputs, N.O., 500 mA, 45V, 2A peak
Laser Spot Diameter	0.1mm at 10M, 0.2mm at 20M		
MTTF	32,000 hrs	Function Indication	Green LED
Power Indication:	Red LED	Contamination Indication	Flashing Yellow LED

Reflector REF-2
Air Purged & Cooled
Rating: 90°C without air cooling
140°C with air cooling

Reflector REF-2HT
Air Purged & Cooled
Rating: 140°C without air cooling
180°C with air cooling

Terminal Connections		
Pin No.	**Wire Color**	**Function**
1	Red	+ 24VDC Supply
2	Black	0VDC Supply
3	Green/Yellow	Shield/Ground
4	Orange	N.C. Relay Output
5	White	Relay Common Output
6	Grey	N.O. Relay Output
7	Yellow	PNP Transistor Output
8	Violet	NPN Transistor Output

MODULOC® Technology - The Total Laser Solution

MODULOC ®
Control Systems

Your Local Sales Representative:

We reserve the right to alter specifications without prior notice. Specifications without tolerances are typical values.

Bulletin MC-LT200M-08-01
January 2008