MODULOC Control Systems

MODEL MD85100 DIGITAL HOT METAL DETECTOR

The self-contained Model MD85100 Digital Hot Metal Detector is available with either air coolant chamber venting as air purge or alternatively with a water coolant chamber and separate air purge.

- ***Fully digital "All-in-One" Design***
- ***LED Bar Display of % IR input signal***
- ***Programmable 250°C to 1000°C Trip Level***
- ***Operates from 80-240VAC or 24VDC Supply***
- ***Lens options: 2°, 4° Spot Lens or 1/2° x 25° F.O.V. Slit Rectangular Lens***
- ***Programmable response times from 1ms to 250ms***
- ***Control Relay and Fast Reed Relay Outputs***
- ***NPN and PNP Transistor Outputs***
- ***Remote Self-Check Facility***
- ***Unique combined air purge and coolant facility***
- ***Optional Water Coolant Radiator & separate Air Purge***

General Description

The MD85100 is a fully digital "All-in–One" Hot Metal Detector uniquely incorporating a bar display showing the % IR input signal relative to the pre-set threshold as well as programmable thresholds and response times via simple programming switch action. This and the universal connection format means it provides the user with one universal Detector that can be used throughout the mill. The MD85100 is the economical choice. Now there is no need to stock various Detectors for each location. Costly multiple inventory can be replaced by one Detector.

The MD85100 Hot Metal Detector is a robust sensor activated by the infra-red radiating from the hot product. Impervious to water or steam it is built to withstand the harshest of environments. The product is detected via a highly stable InGaAs Photodiode to ensure detection regardless of heavy water and steam and incorporates filtering that removes the visible spectrum to minimize sensitivity to extraneous light. The precise 0.5° x 25° lens ensures accurate detection of strip and accommodates bar bounce. For general tracking or mounting the HMD at a long distance from the line various spot lenses are available.

This Detector is especially suitable where ambient temperatures are subject to large changes. In standard format, a large air cooled chamber vents via deflector in front of the lens to allow the use of non-instrument air and provides air purging. Alternatively, an optional sealed loop water coolant radiator accommodates tap pressure and a separate air purge inlet may be provided.

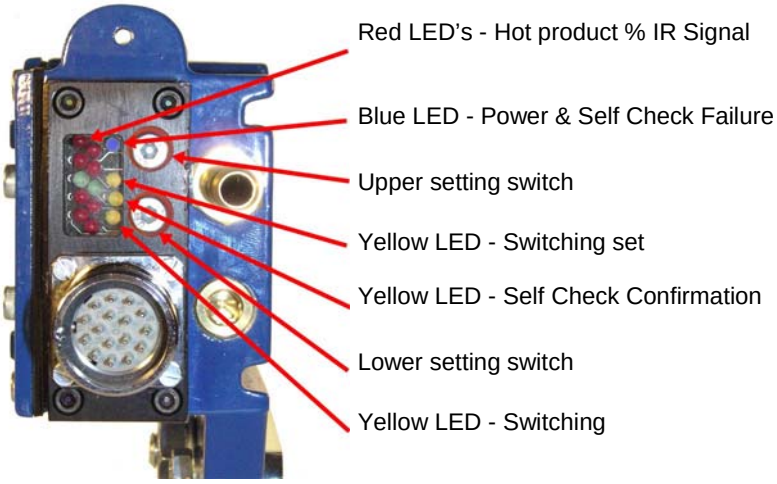

Rear Bar Display

The rear bar display allows the user to clearly establish the amount of received IR both from the background metalwork and the bar being detected and thereby establishing the correct trip level required. This display also allows the user to align the Detector from a low energy source such as a flashlight, which normally would be insufficient to switch the Detector. Adjustment of both the threshold and the response time is also clearly defined by this bar display.

MODULOC Technology - The Total Sensor Solution

MODULOC **Control Systems Ltd.**
Wheathamstead, Hertfordshire, AL4 8SB United Kingdom
Phone: +44 (0)845 8736501 FAX: +44 (0)1582 831980
E-Mail: sales@moduloc-intl.com Website: www.moduloc-intl.com

MODULOC **Control Systems, Inc.**
500 Garden City Drive. - Suite 2B, Monroeville, PA 15146 USA
Phone: 412-824-1260 FAX: 412-824-8890
E-Mail: sales@moduloc-usa.com Website: www.moduloc-usa.com

Housing Specifications

Housing: Robust die-cast IP66 Watertight Aluminum Housing, Oven baked blue paint
Housing Rating: IEC IP66, DIN, 89011
Weight w/o Cable: 1.9 Kg
Connector: IP65 Plug/Socket
Cable Length: 1.5 M Standard up 10 M available
Cooling: Standard: -A Air Cooled & Air Purged
Optional: -D Water Cooled & Air Purged

Air & Water Specifications

Air Pressure: 1 - 2 cu ft./min at 5 PSI for normal conditions, non-instrument dry air and 10 - 15 PSI for severe conditions
Water Pressure: 1 - 2 bar
Water Volume: Regulate between 0.5 - 1 liters/min.
Water Temp.: For Ambient Temperature up to +80°C (176° F) use industrial quality water at 25°C (77°F)
For Ambient Temperature up to +120°C (250°F) use water chilled to 5°C (41°F)

Dimensions

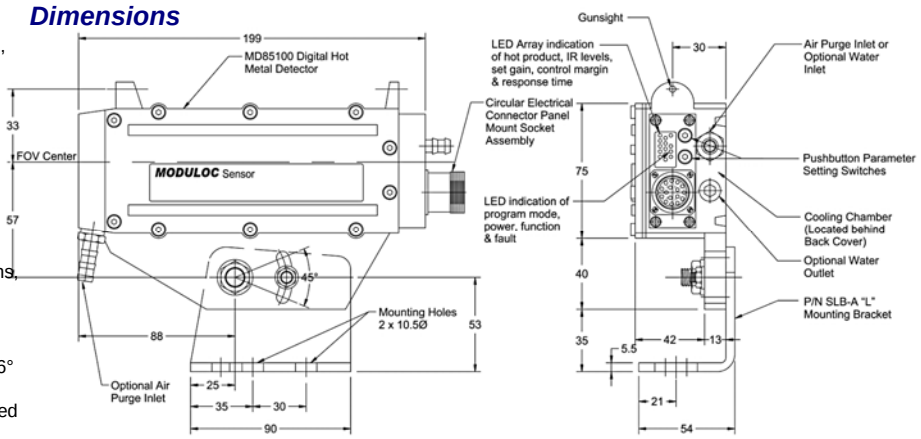

Part Number Specifications

Example: MD85100-81-CR2-A

Supply Voltage: -81 80 - 240 VAC ± 15% 50/60 Hz and 24 VDC ± 15%
Lens: **-CR0** 1° x 5° F.O.V. Rectangular Slit
-CR1 1° x 15° F.O.V. Rectangular Slit

Cooling: -A Air Cooled & Air Purged
-D Water Cooled & Air Purged

General Specifications

Lens F.O.V.:	**Standard: -CR2** 1/2° x 25° Rectangular Slit **Optional: -CR0** 1° x 5° Slit, **-CR1** 1° x 15°Slit, **-C2** 2° Spot or **-C4** 4° Spot	Supply Voltage	**Standard: -81** 80 - 240 VAC, 50/60 Hz and 24 VDC ± 16%
Sensing Element	InGaAs Photodiode	Power Consumption	5 VA
Power Indication:	Blue LED	Operating Temperature	-20°C to +50°C (-4°F to 122°F) w/o air or watercooling
Function Indication	Top & Bottom Yellow LED's		-20°C to +60°C (-4°F to 140°F) w/ air cooling
% I.R. Signal	Red/Green/Red Bar Display		+2°C to +120°C (36°F to 250°F) w/ water cooling
Remote Self-Check	Middle Yellow LED's	Output (#1)	Cradle Relay Output, SPNO, 240 VAC, 8A 20 msec response time.
Min/Max I.R. Threshold settings	Down to 250°C (518°F) and up to 1000°C (1832°F) via programming switch	Output (#2)	Reed Relay Output, SPNO, 240VAC, 0.5A 2 msec response time.
Response Time:	1 msec. min to 250 msec max., via programming switch	Output (#3 & #4)	PNP and NPN Transistor Outputs, N.O., 500 mA, 45 VDC, 2A peak (requires 24VDC supply)

* Optional Logic Alarm Now Available

Additional Information

To accommodate variation in bar temperature and background IR, various precise threshold are programmable via covered switches from 250°C to 1,000°C to ensure reliable switching with reference to both the displayed background and product IR signal. Furthermore, response time is programmable from 1 ms to 250ms to accommodate black spots on the bar.

The MD85100 incorporates a remote self-check facility remotely energized by closed contacts that lights up an internal IR LED to switch the Detector and verify its' outputs operate correctly.

The MD85100 will operate from either 80-240 VAC or 24 VDC power input. Standard outputs include a cradle relay, a fast reed relay and both NPN/PNP transistor outputs.

North America & Asia Terminal Connections*

Pin No.	Wire Color*	Function
1	Pink	Self-Check to + 24VDC Supply
2	Red	+ 24VDC Supply
3	Black (Brown)	80 - 240VAC Supply Hot (L1)
4	White (Blue)	Supply Neutral (L2)
5	Violet	PNP Transistor Output (#3)
6	Blue (Black)	0VDC (For 24VDC Supply)
7	Green	Ground
8	Brown (White)	Cradle Relay Output (#1) N.O. Contact
9	Orange	Cradle Relay Output (#1) N.O. Contact
10	Light Blue	NPN Transistor Output (#4)
11	Yellow	Reed Relay Output (#2) N.O. Contact
12	Grey	Reed Relay Output (#2) N.O. Contact

* = European Connections are Shown in Parenthesis

MODULOC Technology - The Total Sensor Solution

MODULOC
Control Systems

Your Local Sales Representative:

We reserve the right to alter specifications without prior notice. Specifications without tolerances are typical values.

Bulletin MC-MD85100-09-01
January 2009