MODULOC Control Systems

SERIES 9000 REMOTE LENS - TYPE Q1 HIGH TEMPERATURE QUARTZ ROD

- ***High Temperature Quartz Rod Lens***
- ***Shielded 1° Spot Field of View***
- ***1000°C Ambient rating and 1300°C Radiant rating.***
- ***Robust Stainless Steel Lens Shroud with protective nozzle and air purge facility.***

General Description

The Type Q1 High Temperature Quartz Rod lens is specifically engineered for mounting in exceptionally high ambient temperatures very close to the product line, adjacent to furnaces, caster strands, hot slabs, blooms or billets. It withstands 1000°C ambient temperature and 1300°C radiant heat.

The Q1 Lens is provided in a Model ACP-1199 robust stainless steel lens shroud with protective nozzle and air purge facility. The shroud incorporates a double nozzle shielding with internal air purge inlet to prevent the ingress of contaminate in the worst installation point. Hence, it is well suited for mounting under the roller table and close to the product.

The Q1 Lens should not be mounted far from the pass line as it's field of view is restricted and lens arrangement is not suited for this usage.

MODULOC Control Systems Ltd.
Wheathamstead, Hertfordshire, AL4 8SB United Kingdom
Phone: +44 (0)845 8736501 FAX: +44 (0)1582 831980
E-Mail: sales@moduloc-intl.com Website: www.moduloc-intl.com

MODULOC Control Systems, Inc.
500 Garden City Drive. - Suite 2B, Monroeville, PA 15146 USA
Phone: 412-824-1260 FAX: 412-824-8890
E-Mail: sales@moduloc-usa.com Website: www.moduloc-usa.com

Dimensions

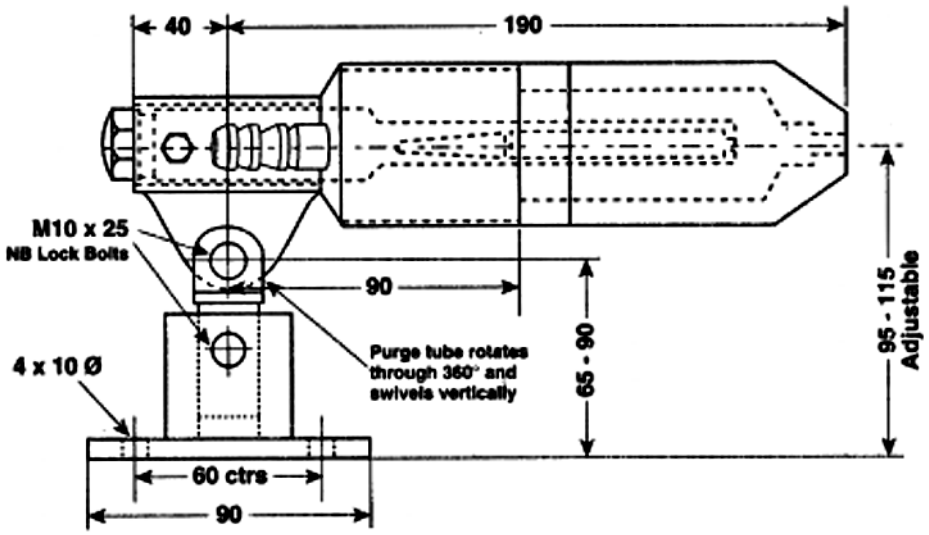

General Specifications

Shroud Housing:	Stainless Steel
Housing Rating:	IEC IP65, DIN, 89011
Fittings:	Brass
Lens Rod:	Quartz
Field of View	1°
Scanned Area at 1 meter	20mm
Ambient Temperature Rating:	-20°C to +1000°C with Air Cooling
Radiant Temperature Rating:	1300°C Maximum
Air Pressure Requirements:	5 cu ft./min at 15 PSI

Note: The Fiber Optic Cable that is used for connection to the quartz lens is rated for 400°C ambient temperature. Further protection of the fiber optic cable should be provided when it can be exposed to temperatures above 400°C.

We reserve the right to alter specifications without prior notice. Specifications without tolerances are typical values.

Your Local Sales Representative:

Bulletin MC-9000-Q1-09-01
January 2009