MODULOC Control Systems

TYPE 9000 REMOTE HOT METAL DETECTOR LENSES

Used in conjunction with Model 9100 Remote Hot Metal Detector (HMD) Sensors, these lenses meet all installation requirements.

Robust lenses for mounting close to hot product or hot metal where ambient temperatures are subject to extreme variation. Impervious to water or steam and built to withstand the harshest mill environments

Used in conjunction with flexible armored fiber optic leads, theses lenses provide a high level of accuracy by allowing the selection of the ideal lens arrangement for the installation. There are four styles of lenses available.

Type FR Precision Slit Lens ½° x 25° Field of View, utilizing linearized fiber optic leads.

Incorporating the following features:

- ***Robust cast aluminum housing rated IP66 with unique air purge & cooling facility.***
- ***Optional Water Cooling with separate air purge available.***
- ***Gunsight Alignment***
- ***Internal 5° & 15° vertical shuttering option.***
- ***Ambient temperature rating of 180°C without cooling and up to 230°C with cooling***

Ideal for length measurement of hot strip and plate.

Type SR Stainless Steel Slit Lens 2° x 15° Field of View.

Incorporating the following features:

- ***Separate air purged columnator tube option.***
- ***Ambient temperature rating of 400°C.***
- ***Slit field of view at low cost***
- ***Used in conjunction with flexible armored fiber optic leads***

Highly suitable where rod & bare bounces about the center line

Stainless Steel Tubular Lenses 1°, 2°, 4° or 7° Spot Field of View.

Incorporating the following features:

- ***Standard 25 mm diameter housing for all lenses.***
- ***Detached air purge facility via lens mount***
- ***Ambient temperature rating of 180°C or 400°C.***
- ***Used in conjunction with flexible armored fiber optic leads***

Inexpensive lenses that are straightforward to install and extremely rugged construction.
Ideal for product tracking.

Type Q1 High Temperature Quartz Rod Lens, shielded 1° Spot Field of View.

Specifically for mounting in exceptionally high ambient temperature areas adjacent to furnaces, casters, hot slabs, hot billets or hot strip. Withstands 1000°C radiant heat and provided in a robust lens shroud with protective nozzle and air purge facility. High volume air purge allows for mounting beneath the line. Used in conjunction with flexible armored fiber optic leads

MODULOC Technology - The Total Sensor Solution

MODULOC Control Systems Ltd.
Wheathamstead, Hertfordshire, AL4 8SB United Kingdom
Phone: +44 (0)845 8736501 FAX: +44 (0)1582 831980
E-Mail: sales@moduloc-intl.com Website: www.moduloc-intl.com

MODULOC Control Systems, Inc
500 Garden City Drive. - Suite 2B, Monroeville, PA 15146 USA
Phone: 412-824-1260 FAX: 412-824-8890
E-Mail: sales@moduloc-usa.com Website: www.moduloc-usa.com

Len Selection Guide

Lens Type	FRO	FR1	FR2	SR2	H1, Q1	H2, F2	H4, F4	H7, F7
Field of View (FOV)	½° x 5°	½° x 15°	½° x 25°	2°x15°	1°	2°	4°	7°
Scanned Area (mm) at 1 meter	10 x 100	10 x 300	10 x 500	20 x 250	20	40	80	120

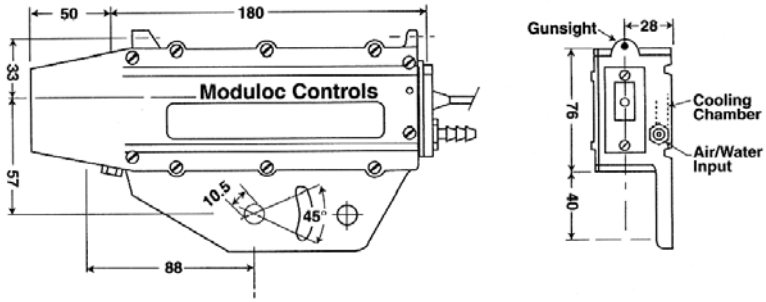

Type FR Lens Specifications

Housing:	Aluminum AL6, Oven baked blue paint.
Housing Rating:	IEC IP66, DIN, 89011
Temperature Rating:	-20°C to +180°C without air cooling
	-20°C to +200°C with air cooling
	to +230°C with water cooling

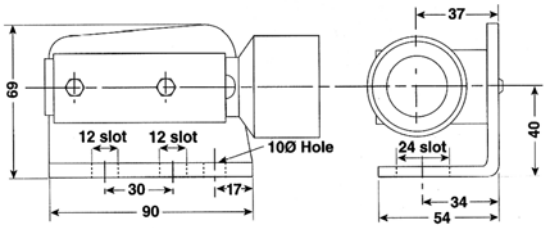

Type SR Lens Specifications

Housing:	Stainless Steel
Housing Rating:	IEC IP65, DIN89011
Temperature Rating:	Ambient: -20°C to +400°C

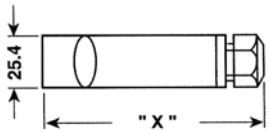

Lens Type	H1	F2/H2	F4/H4	F7/H7
Field of View (FOV)	1°	2°	4°	7°
"X" Dimension	190	130	110	80

Type H & F Lens Specifications

Housing:	Stainless Steel, 25mm diameter
Housing Rating:	IEC IP66, DIN89011
Temperature Rating: Ambient:	Type F: -20°C to +180°C
	Type H: -20°C to +400°C

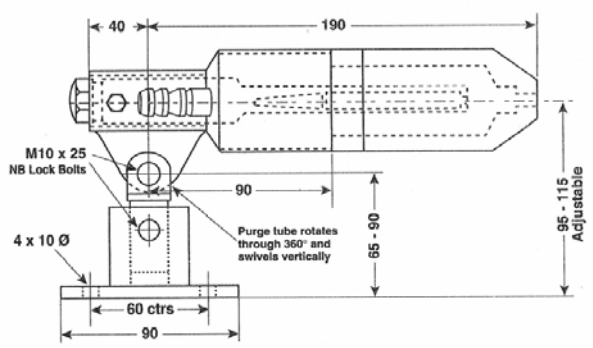

Type Q1 Lens Specifications

Housing:	Stainless Steel
Housing Rating:	IEC IP65, DIN89011
Temperature Rating:	Ambient: -20°C to +800°C
	Radiant: +1000°C Maximum

MODULOC Technology - The Total Sensor Solution

MODULOC
Control Systems

We reserve the right to alter specifications without prior notice. Specifications without tolerances are typical values.

Your Local Sales Representative:

nqa. ISO 9001 Registered
UKAS QUALITY MANAGEMENT 015

Bulletin MC-MD9000L-09-01
January 2009