MODULOC Control Systems

ELDP & MDHD PRODUCT FAMILY - LASER DISTANCE METERS

- ***Advanced totally safe Class I Lasers for precise distance measurement.***
- ***Powerful Micro-Processor with self diagnostics.***
- ***Time-Of-Flight Measurement Technique.***
- ***Standard Interfaces include RS232/RS422, 4-20mA analog and two digital switched outputs.***
- ***Selectable visible Class II pulsed laser pointer for aiding alignment.***

Features

- High resolution of between 1.5 to 4 mm
- Fast measurement rate down to 1ms
- Robust compact industrial design
- Single, multiple or mean average measurement
- Dual digital outputs for zone protection
- Standard Interface: RS232/RS422 and Analog
- Intelligent LDM incorporating continuous self test
- Optional Network Interface: PROFIBUS DP
- Secondary Environmental Enclosures are available for additional protection for indoor, outdoor crane mounting, and elevated temperature applications.

Product Family	Measurement Ranges
• **ELDP10**	Off a reflector panel up to 80M Off natural surfaces up to 7.5M*
• **MDHD20HT**	Off a red hot surface up to 20M At temperatures up to 1400°C
• **MDHD100**	Off a High Gain Reflector up to 800M Off natural surfaces up to 70M*
• **MDHD600**	Off a High Gain Reflector at 600, 800 and 1200 Meters.

*Grey surface range. White plus 50%, Black less 50% (approx.)

Typical Applications

Product Material	Length, width, level and position of product.
Material Handling	Positioning of Automated Storage/Retrieval Systems and other handling vehicles.
Metals Industry	Measure/Position slab, billet, bloom or bar, automatic cutoff and coil diameter.
Crane Control	Positioning of cranes & crane trolleys on X, Y and Z axis.
Collision Avoidance	Distance safety warning between vehicle and reflective target.

Description

ELDP & MDHD Family of Laser Distance Meters operate via a unique pulsed time-of-flight (TOF) measurement technique and measure distances over working ranges of up to 1200 meters according to reflection surface. They transmit ultra-short light pulses, measure the TOF to the object and back to derive the distance and transmit this data information via an interface to a computer, PLC or an analog instrument. A High Temperature Model is available for Measurement of a Red Hot Surface up to 1400°C

Equipped with a powerful μ-Processor, these LDM's are able to handle a variety of measurement tasks. By means of parameterized mean value calculation, high dynamic positioning tasks may be accomplished.

Two programmable threshold bands can be defined. Measurements below these thresholds are indicated via switch outputs & LEDS. These thresholds & outputs are programmable via RS232/RS422 connection to a PC or a local interface CPU. Equipped with opto-coupled RS 2232, RS422 & analog interface (with one digital output) as standard. Optional PROFIBUS DP Interface is available.

MODULOC Technology - The Total Laser Solution

MODULOC Control Systems Ltd.
Wheathamstead, Hertfordshire, AL4 8SB United Kingdom
Phone: +44 (0)1727 821313 FAX: +44 (0)1727 826804
E-Mail: sales@moduloc-intl.com Website: www.moduloc-intl.com

MODULOC Control Systems, Inc.
2808 Broadway Blvd. - Suite 201B, Monroeville, PA 15146 USA
Phone: 412-824-1260 FAX: 412-824-8890
E-Mail: sales@moduloc-usa.com Website: www.moduloc-usa.com

DIMENSIONS

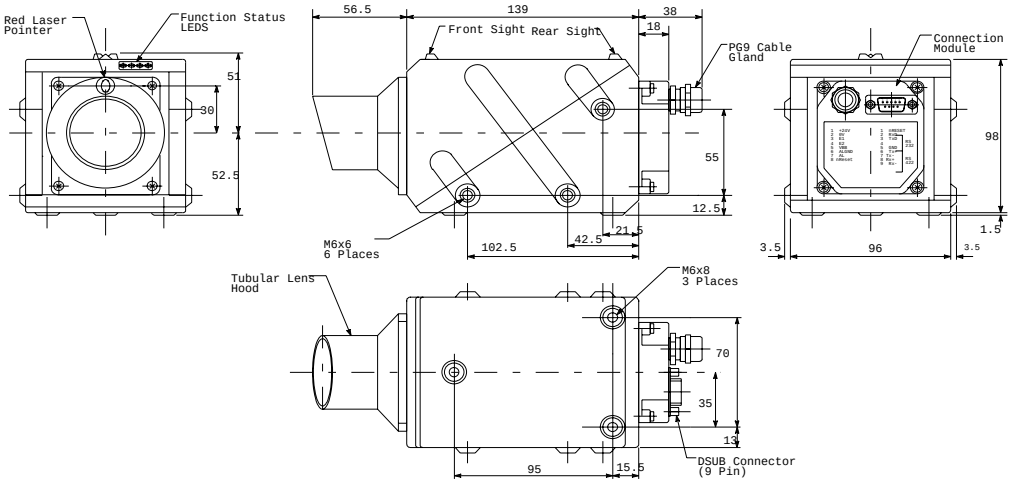

Pin Out Connections

Screw Terminal Block:

1. +24V:	Supply (DC+)
2. GND:	Supply ground
3. E1	Switching output 1
4. E2	Switching output 2
5. VBB	E1, E2 Supply
6. ALGND	Analog ground
7. AL	Analog Output
8. nRESET	external RESET

D-SUB 9 Connector:

1. nRESET	external RESET
2. RxD	RS232 Input
3. TxD	RS232 Output
4. NC	Not used
5. GND	RS232 ground
6. Tx+	RS422 Output
7. Tx-	RS422 Output
8. Rx+	RS422 Input
9. Rx-	RS422 Input

Secondary Environmental Enclosures are available for additional protection for indoor, outdoor crane mounted and elevated temperature applications.

Technical Info	Reference Data	ELDP10	MDHD100	MDHD600	MDHD20HT
Typical Working Range off Product Surface in Meters	White (90%) Gray (20%) Black (5%)	0.1 - 20M 0.1 - 7.5M 0.1 - 3.7M	0.5 -155M 2) 0.5 -70M 2) 0.5 - 40M 2)	N/A N/A N/A	For use off of hot glowing material up to 20M
Range	Reflective Foil Plastic Reflector Glass Prism	0.5 - >80M - -	0.5 - >800M 2) – –	0.5 - >600M 2) 0.5 - 800M 2) 0.5 -1200M 2)	
Relative Accuracy 1) (Min. update rate)	Repeatability1)	+/-1.5mm	+/-3 mm	+/-2mm	+/-5mm
Measurements per second	For N>1 Moving average time higher	1000	1000	5000	1000
Maximum Product Temperature		600°C (1112°F)	600°C (1112°F)	N/A	1400°C (2552°F)
Update Measuring Mode options	Single Value Continuous Moving Average	Standard	Standard	Standard	Standard
Measuring Laser	EN 60825-1	Class I	Class I	Class I	Class I
Red Laser Pointer	Via serial interface	Class II	Class II	Class II	Class II
Laser Divergence		5 mrad	5 mrad	5 mrad	5 mrad
Light Spot diameter	At 10M/100M	7cm/(N/A)	7cm/52cm	7cm/52cm	7cm/(N/A)

Status Function Display	4 LED's	Power supply	18 - 30 VDC Isolated, .25A @24VDC
Standard Interface	RS232 & RS422	Enclosure	Aluminum Housing, IP65, 1.2kg
Optional Interface	PROFIBUS DP	Shock & Vibration Rating	IEC 68
Analog Output	4-20mA (0.3%) Isolated	Temperature Range	-10°C - +55°C (14 to 131°F)
Digital Outputs	Dual NPN, Programmable threshold, direction and hysteresis.	Amplitude Control	Mechanical motorized attenuation wedge, error <5mm

1) Reproducibility for typical devices under constant environmental conditions (approx. 20°C , 1013 mbar, same target) after at least 30 minutes power-on time.
2) When close up range blanking is activated the minimum increases to 2M.

MODULOC Technology - The Total Laser Solution

MODULOC
Control Systems

We reserve the right to alter specifications without prior notice. Specifications without tolerances are typical values.

Your Local Sales Representative:

nqa. ISO 9001 Registered
UKAS QUALITY MANAGEMENT 015

Bulletin No. MC-MDHD-LDM-08-01
January 2008