MODULOC® Control Systems

MLC750 LASER TRIANGULATION METERS

- ***Laser Triangulation & CCD array technique with digital signal processing.***
- ***Non-Contact Measurement of Distance, Displacement, Thickness & Difference.***
- ***Works on almost any surface.***
- ***2 High Temperature versions available for Target Surface temperature of 1200°C or 1500°C***
- ***Measurement range: 400 - 1100 mm. (15.8 - 43.3 in.)***
- ***Resolution: 0.5 mm***
- ***Measurement frequency of 2000 Hz, 5000Hz or 10000Hz***
- ***Robust Design***
- ***Serial & Analog Outputs***
- ***Synchronized thickness measurement with two sensors.***
- ***Secondary Environmental Enclosure are available including Air Purged, Air Cooled and Water Cooled with Air Purging.***

Performance

Measured range	400 - 1100 mm	***Measuring range***	700 mm
Center distance	750 mm	***Light Source***	Visible 655/670 nm Laser
Resolution	0.5mm	***Laser Spot Option***	Ø 4 mm
Reproducibility (+/-)	±0.5mm	***-S5 Option (5kHz measuring update)***	Available
Linearity (of Full Scale)	±0.1%	***-S5 Option (10kHz measuring update)***	Available
Temperature Deviation	±0.03% of F.S./°C	***-HM Option (High Temperature)***	Available

Typical Applications

- ***Liquid Level Control***
- ***Distance measurement***
- ***Thickness Measurement***
- ***Weight/Volume Control***
- ***Constant Tension Control***
- ***Roll Diameter***
- ***Profile measurement***
- ***Control of vacuum in containers***
- ***Measurements for feedback in productions lines***
- ***Measurements for quality control and statistics***
- ***Vibration Monitoring of a Rotating Object***
- ***Control of surface treatments***

General Description

The MLC750 Laser Triangulation Meter (LTM) is a compact unit with integrated optics and signal processor for precise measurement of distance or product thickness and width. A focused laser spot is illuminated on the object and the image distance determined by internal CCD array. LED's indicate when the object is at center or is outside measuring range. Installation software is provided for connection to a PC and to display measured values. Measurement of data is via RS232 and analog outputs.

The standard MLC750 operates at a measuring frequency of 2000 measurements per second. The standard MLC750 operates at a serial output update frequency of either 1000 or 2000 measurement points per second.

The MLC750 has programming/select functionality. Group Mode is the main feature. In Group Mode a running average is calculated over a user specified number of measuring points. The user also programs the sensor to disregard a number of, usually all, bad (zero) measuring points before calculating the average value. The average values are calculated at full measuring frequency and are used for converting the analog signals. Several median filters and Level Mode are other available features.

Two identical MLC750 LTM's when connected together automatically provide change in thickness, width or difference values. The MLC750 operates at a 2kHz measuring frequency and at a 1kHz or 2kHz update frequency, and has a serial interface baud rate of 38400 or 115200. The optional -S5 model operates at a a 5KHz measuring frequency and at a 1kHz, 2½kHz or 5kHz update frequency ,and has a serial interface baud rate of 38400,115200 or 230400. The optional -S10 models operate at a 10kHz measuring frequency and at a 1KHz, 2½ kHz, 5kHz or 10kHz update frequency, and has a serial interface baud rate of 38400, 115200, 230400 or 460800. To use the baud rates of 230400 and 460800 the -R4 RS422/RS485 serial interface option is required.

The MLC750 LTM has a broad range of usage for measurement off surfaces where other devices fail. Ideal for measuring off wood, plastic, glass, rubber, paper, foam, textiles, food product, cold, hot or molten metals as well as various liquids.

MODULOC® Technology - Lasers for Precise Product Measurement

MODULOC® Control Systems Ltd.
Wheathamstead, Hertfordshire, AL4 8SB United Kingdom
Phone: +44 (0)1727 821313 FAX: +44 (0)1727 826804
E-Mail: sales@moduloc-intl.com Website: www.moduloc-intl.com

MODULOC® Control Systems, Inc.
2808 Broadway Blvd. - Suite 201B, Monroeville, PA 15146 USA
Phone: 412-824-1260 FAX: 412-824-8890
E-Mail: sales@moduloc-usa.com Website: www.moduloc-usa.com

Dimensions

Housing: Steel/Aluminum/Glass
Housing Rating: IEC IP65
Weight w/o Cable: 1.6 Kg
Cable Length: 2.5 M

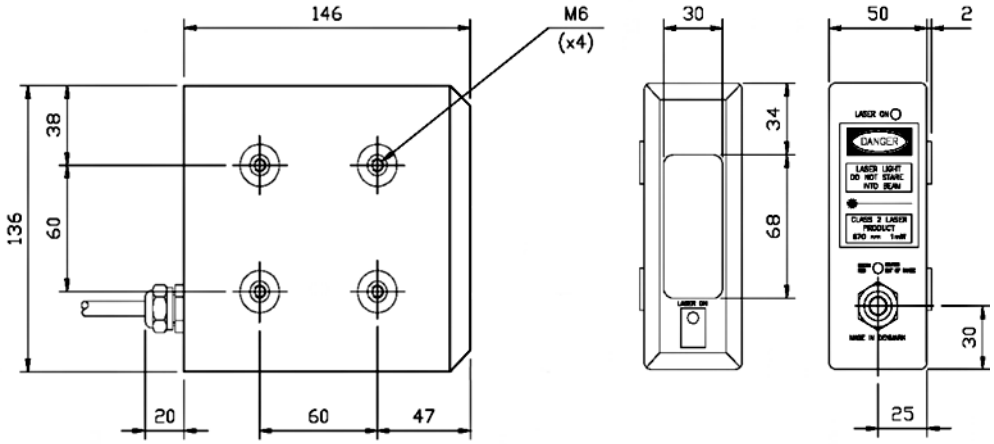

General Specifications

Serial Output	RS232 Standard - up to 115200 baud[1)]	Supply Voltage	24VDC ±10%
Serial Output	RS422/485 (optional)	Power Consumption	4.5 Watt
Digital Output	Digital output 1/10 values of full range	Humidity	Max 90% RH (non condensing)
Analog Output[2)]	1-9VDC & 4-20mA[2)]	Operating Temperature	0°C to +45°C (32°F to 113°F)
Measuring Frequency	2000 Hz [3)]	Storage Temperature	-20°C to +70°C (-4°F to 158°F)
Update Frequency	1000/2000 Hz	Product Temp. Limit	Standard 450°C/842°F
Light Source	Visible 655/670 nm Laser	Laser Class[4)]	Class II, IEC 2 [4)]

1)= The default baud rate is 38400 at 1kHz update frequency. The 115200 baud rate is at 2kHz update frequency.
2)= Analog Output is pre-set at the factory and can be configured, at an additional cost, to suit specific requirements. Analog output frequency is the same as the measuring frequency.
3)= Optional 5000 Hz and 10000Hz measuring frequency is available.
4)= Laser class IIIR (3R) is supplied with the combination of options -HM & -S5, -HM & S10. Class IIIB (3B) is supplied on all –MM versions.

Option: -S5

Increased measuring performance compared to standard model operates at a 5kHz measuring frequency and at a 1kHz, 2½kHz or 5kHz update frequency, at a baud rate of 38400,115200 or 230400. The baud rate of 230400 requires Option -R4 RS422/RS485 serial interface.

Option: -S10

Increased measuring performance compared to standard model operates at a 10kHz measuring frequency, at a 1kHz, 2½kHZ, 5kHZ or 10kHz update frequency, and at a baud rate of 38400, 115200, 230400 or 460800. The baud rates of 230400 & 460800 require optional -R4 RS422/RS485 serial interface.

Option: -R4

Provides a RS422/RS485 serial interface in place of the standard RS232 serial interface.

Thickness Measurement

All MLC LTM's when connected to an identical MLC model will automatically transform into the Master or the Slave of a synchronized Thickness Measuring System .

The Master LTM reads the digital distance data sent from the Slave LTM over the RS232 serial interface, and after taking its own distance information into account, will output the calculated change in thickness to the serial interface as well as to the analog output.

Thus two MLC LTM's will measure thickness, width or difference without an additional control box or special calibration from the factory. This is a unique characteristic of the MLC Laser Triangulation Meters.

Option: -HM High Temperature 1200°C (2192°F)

The -HM options are designed for target surfaces temperatures up to 1200°C. Sensors with this option are specifically designed for measurement on objects that are more than 450°C (842°F) hot, like hot rolled steel or molten metals and glass. These laser class II sensors achieve target temperature up to 1200°C (2192°F), for surface with mirror type properties a special sensor with laser Class IIIB (3B) can be supplied.

All models in the MLC family can be delivered with the -HM option. HM option only be supplied with the standard 2KHz sensor or with the optional -S5 5kHz sensor. The laser class changes to a IIIB when the -HM option is supplied with the -S5 5kHz option.

It is important to stress, that the -HM option only concerns the target temperature. Maximum Ambient temperature is the standard 45°C .

The -HM Option can also be required when there is a high risk of harmful false light as is the case with bright sunlight, both direct and reflected.

Option: -MM High Temperature 1500°C (2732°F)

The –MM option is designed for target surface temperature up to 1500°C.

Sensors that are supplied with this option are specifically designed for measurement of molten metals that are greater than 1200°C (2192°F). These laser sensors achieve target temperatures up to 1500°C (2732°F) and can be used on surfaces with mirror type properties.

All the models in the MLC family can be delivered with the –MM option. The –MM option can be supplied with the 2kHz version.
The laser class changes to a IIIB (3B) when the -MM option is supplied. Optional Water Cooled Secondary Environmental Enclosures with Air Purging are available.

MODULOC® Technology - Lasers for Precise Product Measurement

MODULOC®
Control Systems

Your Local Sales Representative:

We reserve the right to alter specifications without prior notice. Specifications without tolerances are typical values.

Bulletin. MC-MLC750-08-01
January 2008