MODULOC® Control Systems

ODS Type C - LASER TRIANGULATION METERS

- ***Laser Triangulation & CCD array technique with digital signal processing.***
- ***Non-Contact Measurement of Distance, Displacement, Thickness & Difference.***
- ***Works on almost any surface.***
- ***Measurement ranges: 16 - 1100 mm.***
- ***Resolution: .00008 mm to 0.5 mm***
- ***Robust Design***
- ***Serial & Analog Outputs***
- ***Synchronized thickness measurement with two sensors.***

Performance

Model	***ODS20.5***	***ODS115***	***ODS150***	***ODS200***	***ODS250***	***ODS450***	***ODS750***
Measured range (mm)	16-25	100 - 130	100 - 200	100 - 300	100 - 400	200 - 700	400 - 1100
Center distance (mm)	20.5	115	150	200	250	450	750
Resolution	0.0008 mm	0.002 mm	0.010 mm	0.05 mm	0.08 mm	0.1mm	0.5 mm
Reproducibility (+/-)	±0.0008 mm	±0.002 mm	±0.010 mm	±0.05 mm	±0.08 mm	±0.1mm	±0.5 mm
Linearity (of Full Scale)	±0.05%	±0.1%	±0.05%	±0.1%	±0.1%	±0.05%	±0.1%
Select-1 Option	N/A	N/A	N/A	Included	Included	Included	0.1mm
Select-2 Option	Available[1]	Available[1]	Available[1]	Available	Available	Available	Available
-HT Option	N/A	Available	Available	Available	Available	Available	Available

Typical Applications

- *Liquid Level Control*
- *Distance measurement*
- *Thickness Measurement*
- *Weight/Volume Control*
- *Constant Tension Control*
- *Roll Diameter*
- *Profile measurement*
- *Control of vacuum in containers*
- *Measurements for feedback in productions lines*
- *Measurements for quality control and statistics*
- *Vibration Monitoring of a Rotating Object*
- *Control of surface treatments*

General Description

The ODS Type C Laser Triangulation Meter (LTM) is a compact unit with integrated optics and signal processor for precise measurement of distance or product thickness and width. A focused laser spot is illuminated on the object and the image distance determined by internal CCD array. LED's indicate when object at center or outside measuring range. Installation disc provided for connection via IBM PC and display of measured values. Measurement data via RS232 and analog outputs.

Two identical ODS Type C LTM's when connected together automatically provide change in thickness, width or difference values. Programmable Select-1 Models reverse measurement for level control and averaging of readings at 1 kHz update rate. The Select-2 Models have faster 2 kHz update rate and optimized light control for measuring off difficult shiny or translucent surfaces.

These LTM's have a broad range of usage for measurement off surfaces where other devices fail. Ideal for measuring off wood, plastic, rubber, paper, foam, textiles, food product, cold, hot or molten metals as well as various liquids.

[1] = The Select-2 programmability of the ODS20.5, ODS115, ODS150 LTM's is not available, the sampling and output frequency is fixed at 2 kHz.

MODULOC® Technology - Lasers for Precise Product Measurement

MODULOC® Control Systems Ltd.
St. Albans, Hertfordshire AL2 1JG United Kingdom
Phone: +44 (0)1727 821313 FAX: +44 (0)1727 826804
E-Mail: sales@moduloc-intl.com Website: www.moduloc-intl.com

MODULOC® Control Systems, Inc.
2808 Broadway Blvd. - Suite 201B, Monroeville, PA 15146 USA
Phone: 412-824-1260 FAX: 412-824-8890
E-Mail: sales@moduloc-usa.com Website: www.moduloc-usa.com

Dimensions

Housing: Steel/Aluminum/Glass
Housing Rating: IEC IP65
Weight w/o Cable: 1.6 Kg
Cable Length: 2.5 M

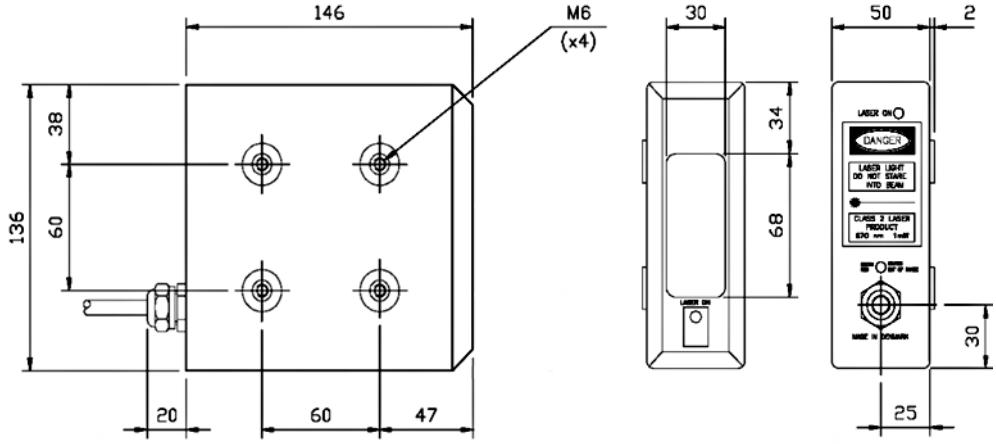

General Specifications

Serial Output	RS232 Standard - up to 38400 baud	Supply Voltage	24VDC ±10%
Serial Output	RS422/485 (optional)	Power Consumption	4.5 Watt
Digital Output	Digital output 1/10 values of full range	Humidity	Max 90% RH (non condensing)
Analog Output	1-9VDC/4-20mA[2, 3]	Operating Temperature	0°C to +45°C
Updating Frequency	500/1000 Hz (1000/2000 Select-2 Models)	Storage Temperature	-20°C to +70°C
Temperature Deviation	±0.03% of F.S./°C	Product Temp. Limit	Standard 600°C/Hi-Temperature 1200°C
Light Source	Visible 670 nm Laser	Laser Class	IEC 2

[2]= Select-2 Models do not have a voltage output. [3]= Analog Output is pre-set at the factory and can be configured, at an additional cost, to suit specific requirements.

Option: Select -1 **Programmable version of the ODS range with 4 modes of operation:**

- **Group mode** - offering averaging after filtering out zero values.
- **Stop & Go** - measuring activity via RS232.
- **Level mode** - will output distance reading that are reversed.
- **Extended thickness mode** - doubles the measuring range at half the resolution.

The ODS Select-1 Sensors are programmed with the PC software supplied with the sensor. The PC Program receives data from the ODS Select-1 Sensor and displays the measured distance on the screen. When the sensor is specifically hardwired the PC program is able to send data to the sensor. The sent instructions given are stored in the sensor flash memory and are retained until the Sensor is reprogrammed.

The ODS Select-1 Sensors provide a choice between double measurement range with half resolution or full resolution with standard measuring range.

The user can define a number of consecutive measurements to be a Group of values. The sensors in this Mode is able to update the Group with a new measurement result at 1 kHz and output the Group average at the same rate. Furthermore the user can instruct the sensor to disregard up to a certain number of void measurements with null-values in the Group, and have the output calculated as the average of the remaining values in the Group.

Option: -HT High Temperature

The ODS -HT Sensors are designed for target surfaces with high temperatures up to 1200°C. The ODS -HT Sensors are especially useful for use on very hot objects such as hot rolled steel or molten metals. The ODS -HT Sensors are like other ODS sensors and designed to give good measuring accuracy over a large measuring range.

Option: Select-2 The high performance version of the ODS LTM, offering the benefits of increased measuring performance with run time programmability on:

- **Moving targets**
- **Angled surfaces**
- **Colorful surfaces**
- **Shiny/difficult surfaces**
- **Transparent surfaces**

The ODS Select-2 Sensors obtain increased measuring performance compared to the Standard models by:

- Operating at twice the measuring and output frequency (e.g. 2000Hz).
- Maximum Baud Rate of 115200.
- Utilizing mathematically optimized laser light intensity control.
- Elimination of light penetrating into partly transparent surfaces.
- Select-2 Models do not have a voltage output.

Thickness Measurement

All ODS LTM's when connected to an identical[4] ODS model will automatically transform into the Master or the Slave of a synchronized Thickness Measuring System .

The Master LTM reads the digital distance data sent from the Slave LTM over the RS232 serial interface, and after taking its own distance information into account, will output the calculated change in thickness to the serial interface as well as to the analog output.

Thus two ODS LTM's will measure thickness, width or difference without an additional control box or special calibration from the factory. This is a unique characteristic of the ODS Type C & Type S Laser Triangulation Meters.

[4]= ODS500, ODS505, ODS700, ODS900 & ODS1000 have the unique capability of connecting to any other ODS model to form a Master - Slave Thickness Measuring System.

MODULOC® Technology - Lasers for Precise Product Measurement

MODULOC®
Control Systems

Your Local Sales Representative:

We reserve the right to alter specifications without prior notice. Specifications without tolerances are typical values.

nqa. ISO 9001 Registered
UKAS QUALITY MANAGEMENT 015

Bul. MC-ODSC-005
February 2005