MODULOC® Control Systems

WCD1K.002 LDM SECONDARY ENVIRONMENTAL ENCLOSURE

- ***Secondary Environmental Enclosure with Water Cooling and Air Purging.***
- ***For use with the ELDP and MDHD Family of Laser Distance Meters.***
- ***Provides cooling where ambient temperature can reach up to 75°C or greater.***
- ***Robust Design Provides Mechanical Protection the LDM.***
- ***Adjustable Mounting Platform, provides Vertical and Horizontal Axis Adjustments.***

Features

- Heavy Duty Durable Design
- Provides additional mechanical protection of Laser Distance Meter.
- Adjustable Mounting Platform, providing Vertical and Horizontal Axis Adjustments.
- Water Cooling allowing the Laser Distance Meter to be used in areas where the ambient temperature exceed its 55°C rating.

ELDP & MDHD Product Family

- ELDP10 for measurements to a reflector panel at distances over 80M or to natural surfaces up to 20M.
- The MDHD20HT is designed for measurements off of a red hot surface up to 1 4 0 0 °C at distances up to 20M.
- MDHD100 for measurements to a reflector panel at distances up to 800M or to natural surfaces up to 155M.
- MDHD600 for measurements to a reflector panel at distances up to 600M & Glass Prism reflectors up to 1200M.
- Additional Secondary Environmental Enclosures are available including air purged, and water cooled.

Typical Applications

Furnace applications in hot areas where the maximum ambient temperature is between 55°C - 75°C or greater.
Any Laser Distance Meter application in hot areas where the maximum ambient temperature is between 55°C - 75°C or greater.

Description

The WCD1K.002 Laser Distance Meter Secondary Enclosure with Peltier Cooling provides additional mechanical protection plus Water Cooling and Air Purging. The WCD1K.002 allows use of the Laser Distance Meter in areas where the ambient temperature exceeds the specified maximum allowable temperature rating. The WCD1K.002 includes an adjustable Mounting Platform which provides a 10° Vertical Axis Adjustment and a 20° Horizontal Axis Adjustment during alignment.

MODULOC® Technology - The Total Laser Solution

MODULOC® Control Systems Ltd.
Wheathamstead, Hertfordshire, AL4 8SB United Kingdom
Phone: +44 (0)845 873 6501 FAX: +44 (0)158 283 1980
E-Mail: sales@moduloc-intl.com Website: www.moduloc-intl.com

MODULOC® Control Systems, Inc.
2808 Broadway Blvd. - Suite 201B, Monroeville, PA 15146 USA
Phone: 412-824-1260 FAX: 412-824-8890
E-Mail: sales@moduloc-usa.com Website: www.moduloc-usa.com

WCD1K.002 Technical Info

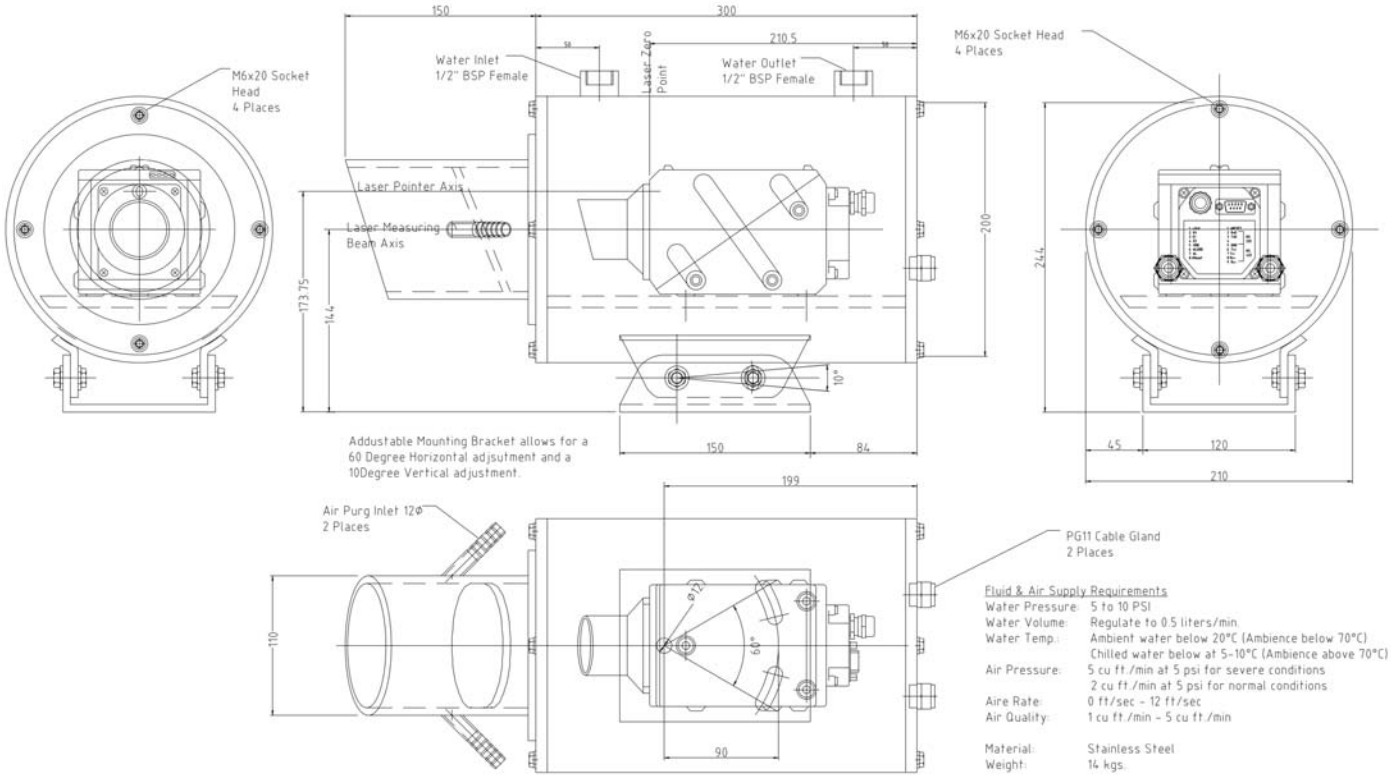

MODULOC® Technology - The Total Laser Solution

MODULOC®
Control Systems

Your Local Sales Representative:

We reserve the right to alter specifications without prior notice. Specifications without tolerances are typical values.

Bulletin MC-WCD1K.002-08-01
January 2008