MODULOC® Control Systems

TECHNICAL BULLETIN NO. TB-ELDP-1004-001

ELDP LASER DISTANCE METERS - APPLICATION NOTES

Application: Measurement of width, length and positioning of slabs in front of a pusher furnace.

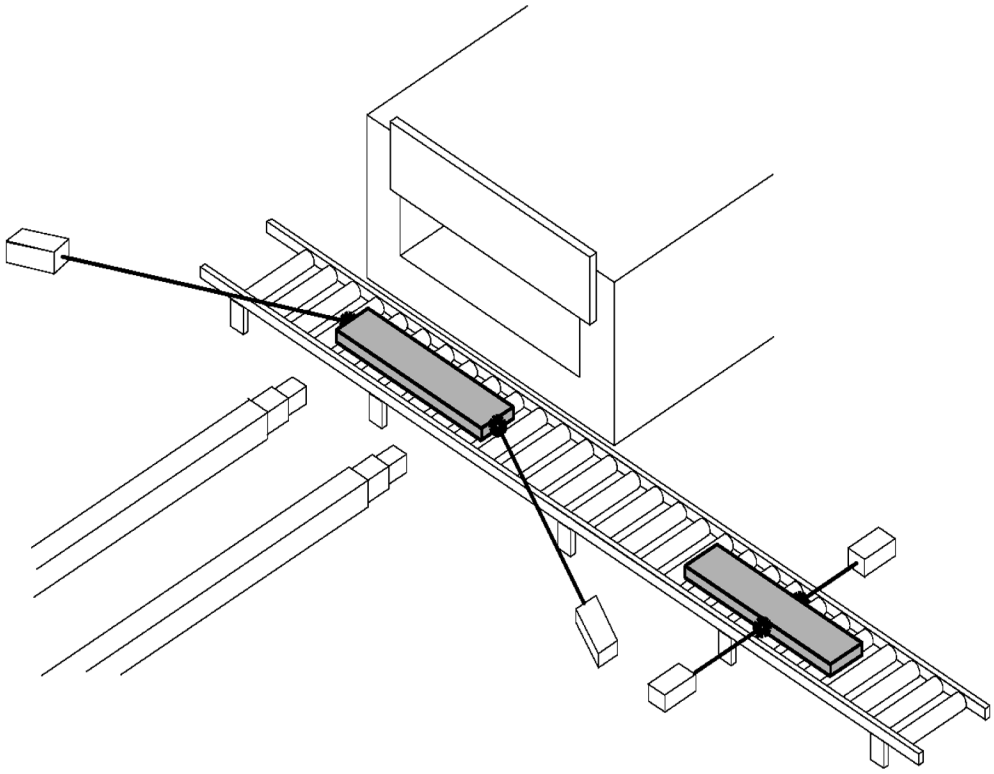

Description: Slabs are centred in front of the furnace inlet before being pushed inside. At the moment, positioning is carried out by watching these on a monitor. If the slabs are incorrectly positioned, they can pile up and damage the tungsten coating of the guides or the furnace itself.

Solution: The slabs are measured by two sensors and centred before they are pushed into pusher furnace.

Advantages:
- measuring of hot and cold slabs
- remote measuring
- automatic operation
- quality assurance, material tracking with identification of the slabs
- protection of the furnace as the slabs are pushed in centrally

MODULOC® Technology - The Total Laser Solution

MODULOC® Control Systems Ltd.
St. Albans, Hertfordshire AL2 1JG United Kingdom
Phone: +44 (0)1727 821313 FAX: +44 (0)1727 826804
E-Mail: sales@moduloc-intl.com Website: www.moduloc-intl.com

MODULOC® Control Systems, Inc.
134 Painter Street, Pittsburgh, PA 15085-1333 USA
Phone: 412-646-1260 FAX: 412-374-9440
E-Mail: sales@moduloc-usa.com Website: www.moduloc-usa.com

January 2003