MODULOC® Control Systems

TECHNICAL DATA SHEET NO. TDS-ODS-2001-001

ODS LASER TRIANGULATION METERS - SELECT-1 MODELS

The programmable version of the ODS Optical Displacement Sensors.

Offering 4 modes of operation:

Operation modes

- **GROUP MODE** - Offering averaging after filtering out zero values.
- **STOP & GO -** measuring activity via RS232/422/485. This function is available all modes.
- **LEVEL MODE** - Will output distance readings that are reversed.
- **EXTENDED THICKNESS MODE** -Doubles the measuring range at half the resolution as compared to Standard Thickness Mode.

General Description

The ODS SELECT-1 sensors are PROGRAMMED with the PC-software supplied with the sensor. The sensor is delivered with a demo disk containing a program for a standard IBM-PC. The program receives data from the ODS SELECT-1 MODEL and displays the measured distance on the screen. When the sensor is specially hardwired the same program will be able to send data to the sensor. The instructions given are stored in the sensor memory and are used every time power is switched on until the ODS SELECT-1 is reprogrammed.

-ODS sensors, SELECT-1 Models as well as Standard Models, will automatically turn into thickness (difference) measurement mode, when they are connected to an ODS sensor of the same Type and Model. No additional Control Box is needed. The SELECT-1 Models provide a choice between double measurement range with half the resolution or the full resolution with standard measuring range.

The user can define a number of consecutive measurements to be a Group of values. The sensor is in this Mode able to update the Group with a new measurement result at 1 kHz and output the Group average at the same rate. Furthermore the user can instruct the sensor to disregard up to a certain number of void measurements with null-values in the Group, and have the output value calculated as the average of the remaining measurement values in the Group.

MODULOC® Control Systems Ltd.
St. Albans, Hertfordshire AL2 1JG United Kingdom
Phone: +44 (0)1727 821313 FAX: +44 (0)1727 826804
E-Mail: sales@moduloc-intl.com Website: www.moduloc-intl.com

MODULOC® Control Systems, Inc.
134 Painter Street, Pittsburgh, PA 15085 USA
Phone: 412-646-1260 FAX: 412-374-9440
E-Mail: sales@moduloc-usa.com Website: www.moduloc-usa.com

ODS Thickness Measurement

General Description

All ODS distance meters will automatically turn itself into being either the Master or the Slave half part of a thickness measuring system when connected to an identical ODS sensor/meter.

The Master sensor reads the digital distance data send from the Slave sensor over the RS232/422/485 serial interface, and after taking its own distance information into account, it will output the change in thickness in its calculated digital form as well as a converted analog signal. The sensors are synchronized and will measure on semitransparent targets if they are wired to run at half the measuring frequency.

A couple of ODS sensors will thus measure thickness, width or difference without any control box or special calibration from the factory. This unique characteristic of the ODS meters are available in the Standard and Compact versions as well as in the Select-1, Select-2 and HT-1 High Temperature Models.

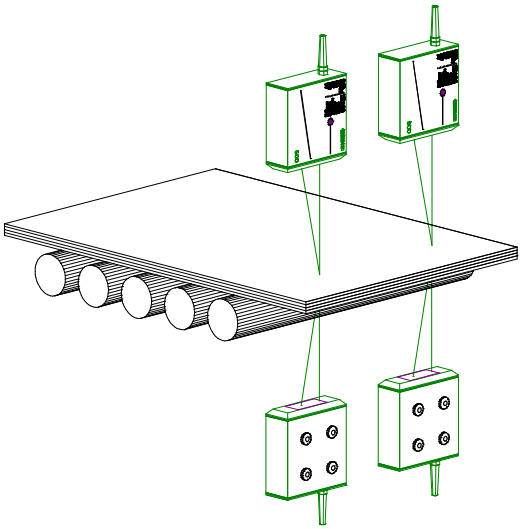

We reserve the right to alter specifications without prior notice. Specifications without tolerances are typical values.

Bul. TDS-ODS-2001-001
January 2003